Only numbered Service Parts are available.

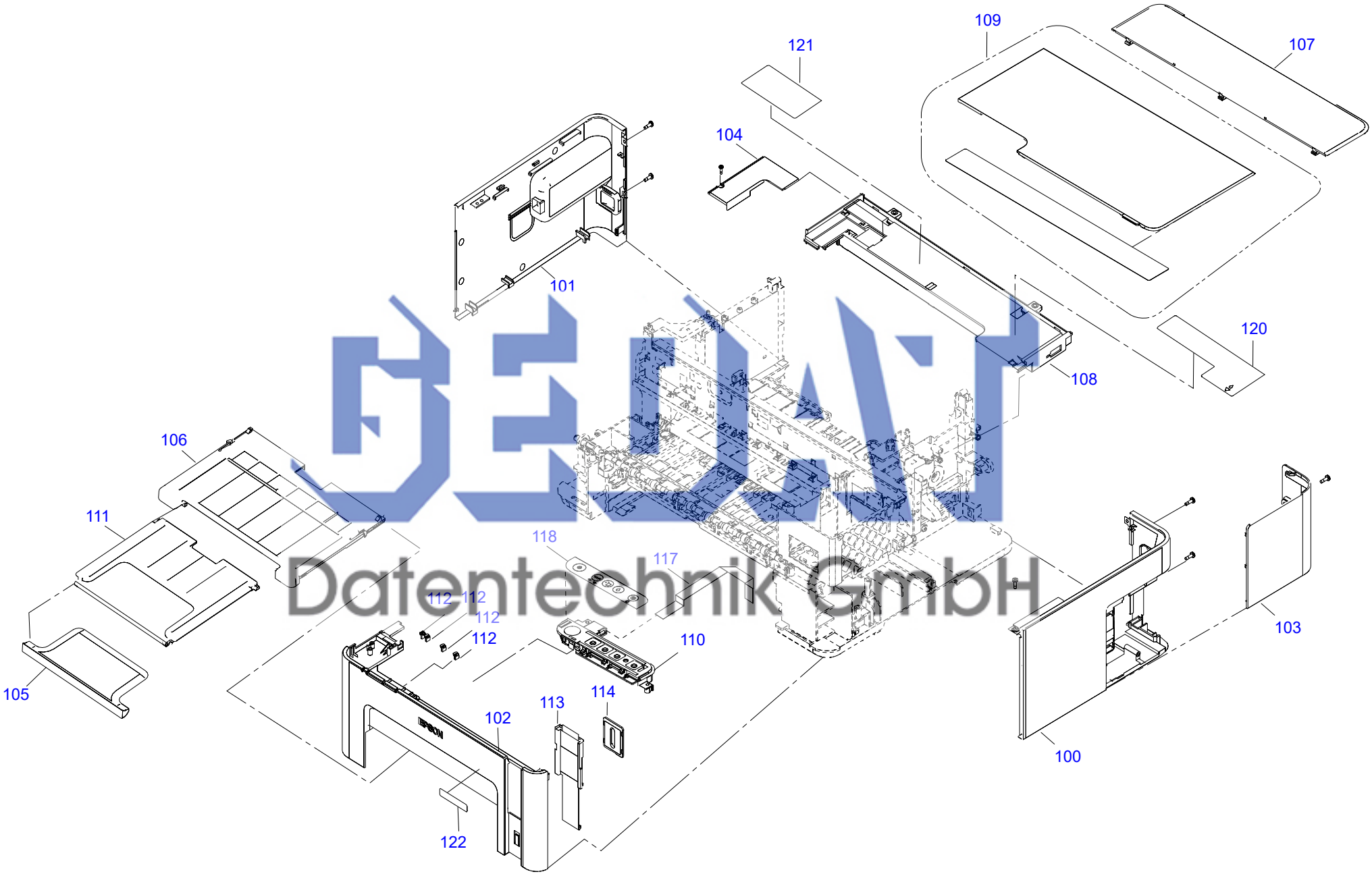

GEWI Datentechnik GmbH

Only numbered Service Parts are available.

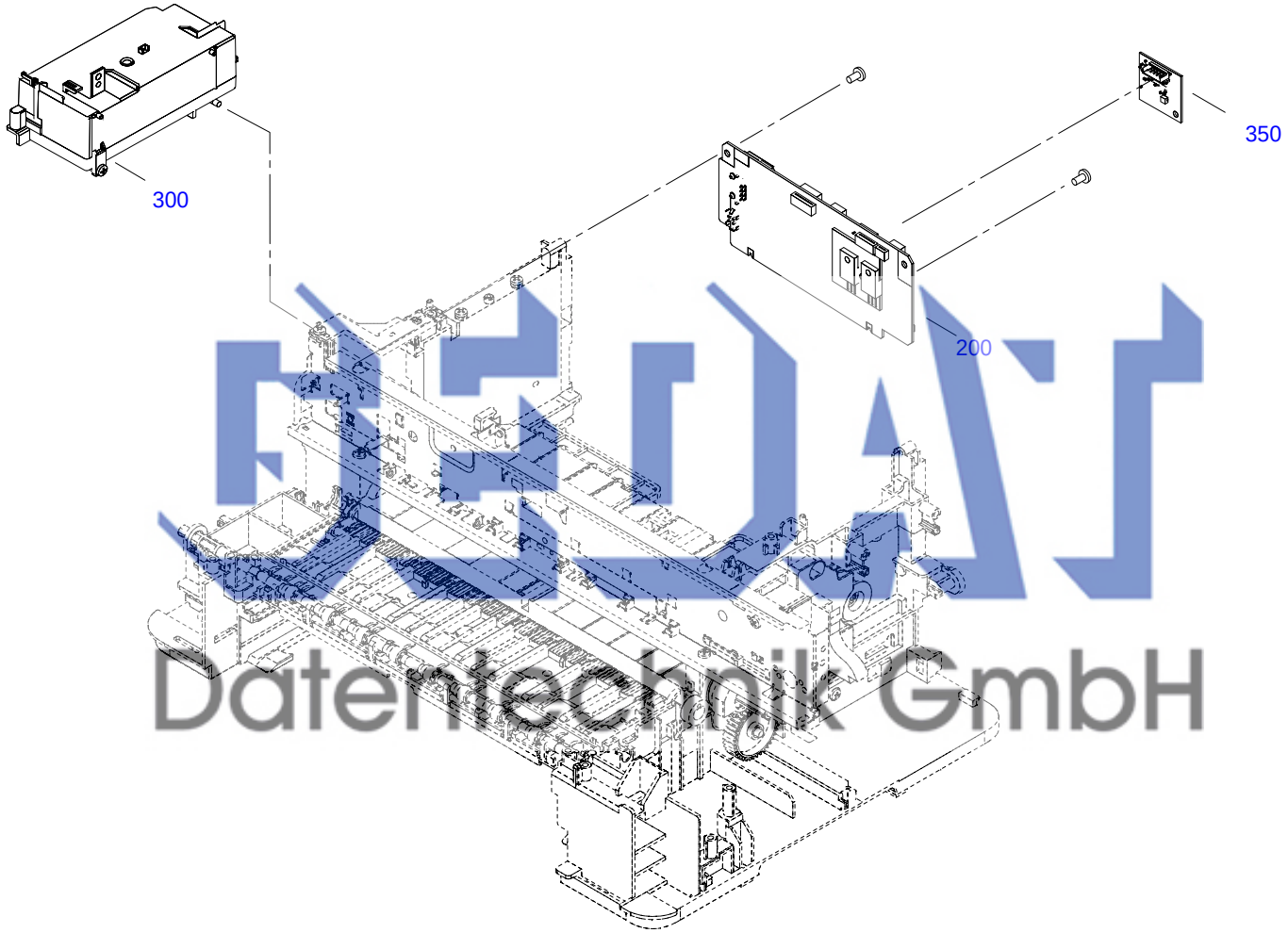

Datentechnik GmbH

Only numbered Service Parts are available.

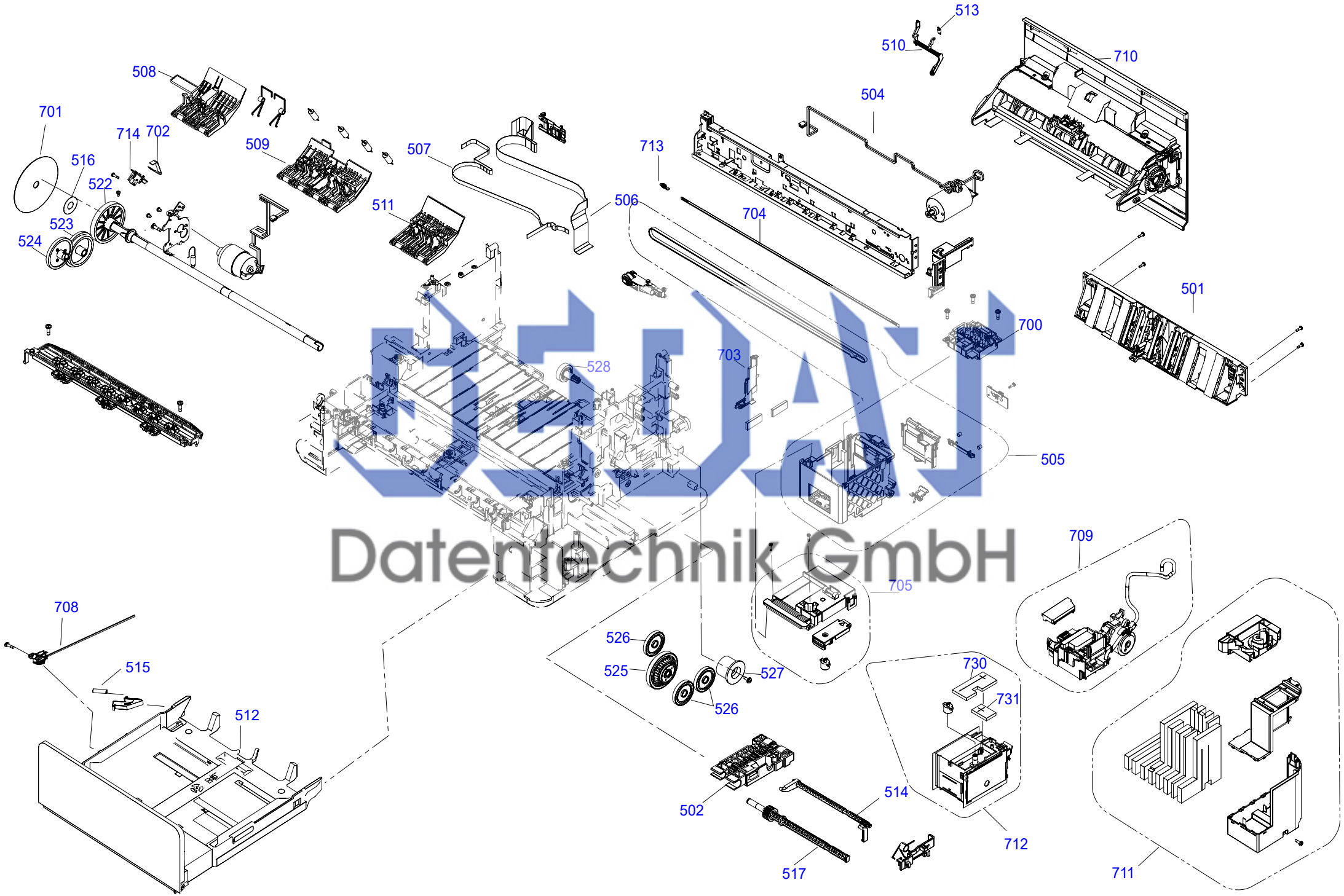

Datentechnik GmbH