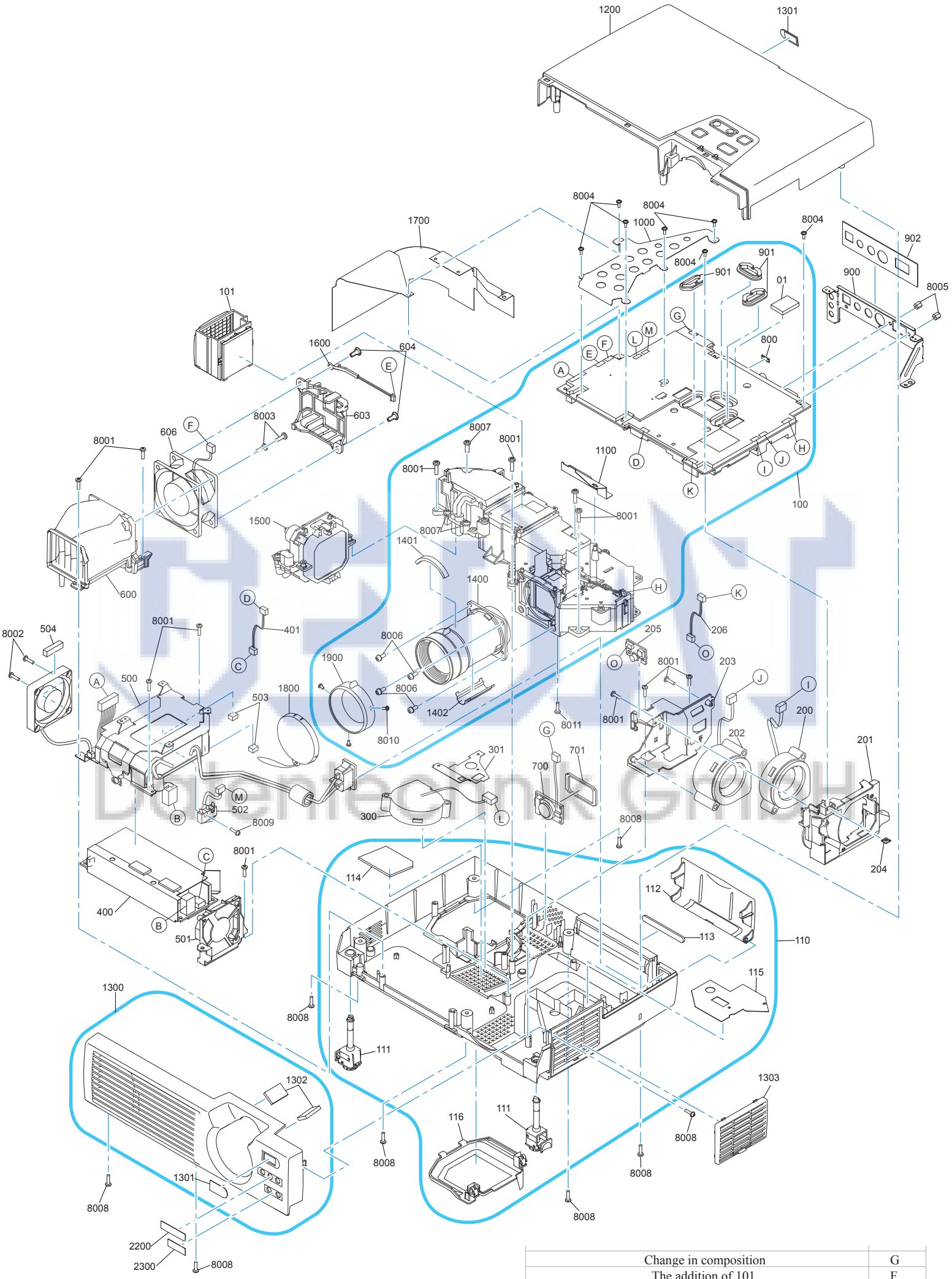

Change in composition	G
The addition of 101.	F
Deletion of 2100	E
History	Rev.No.
Model Name	EMP-730/720/520

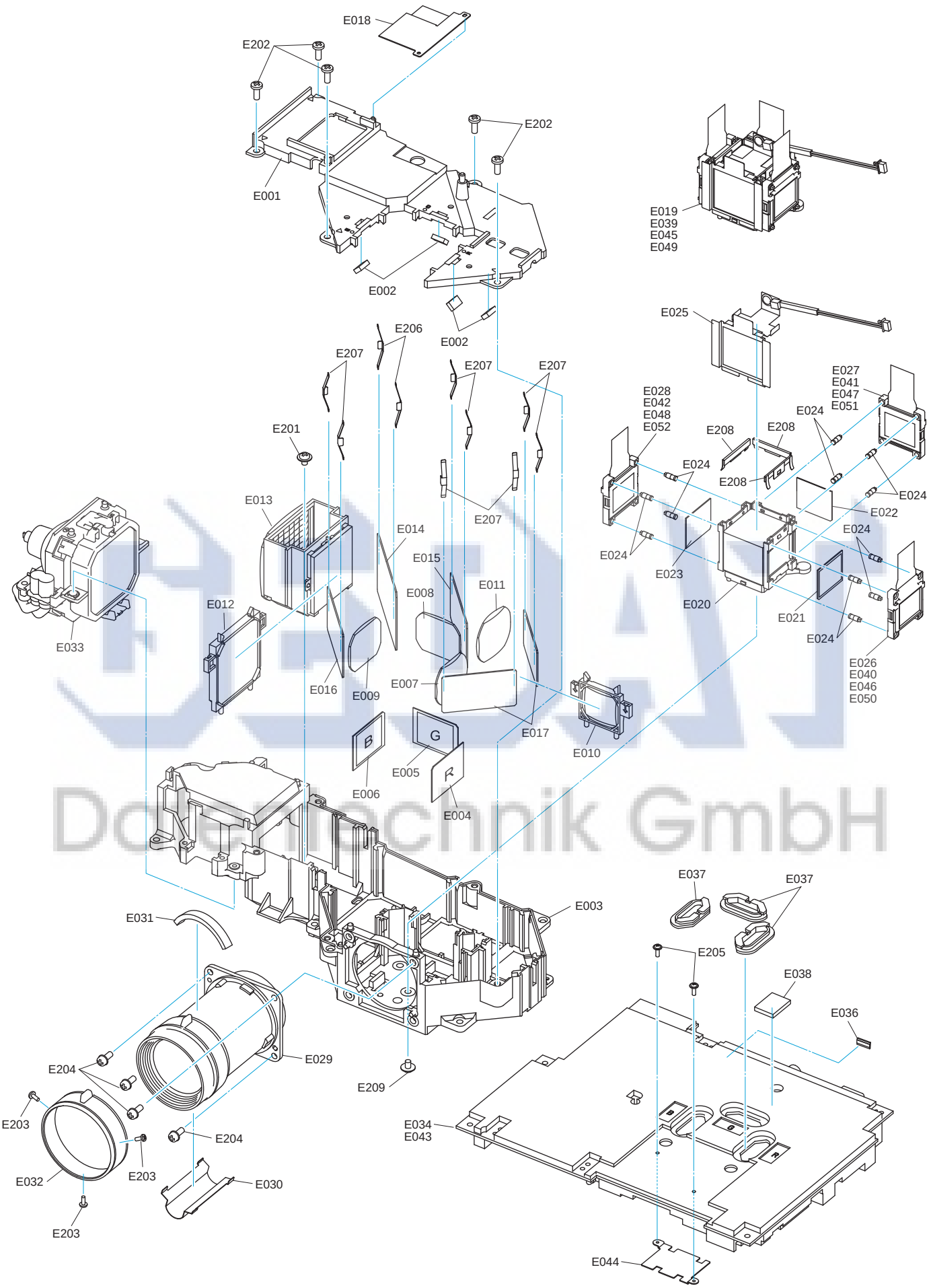

Doeltechnik GmbH