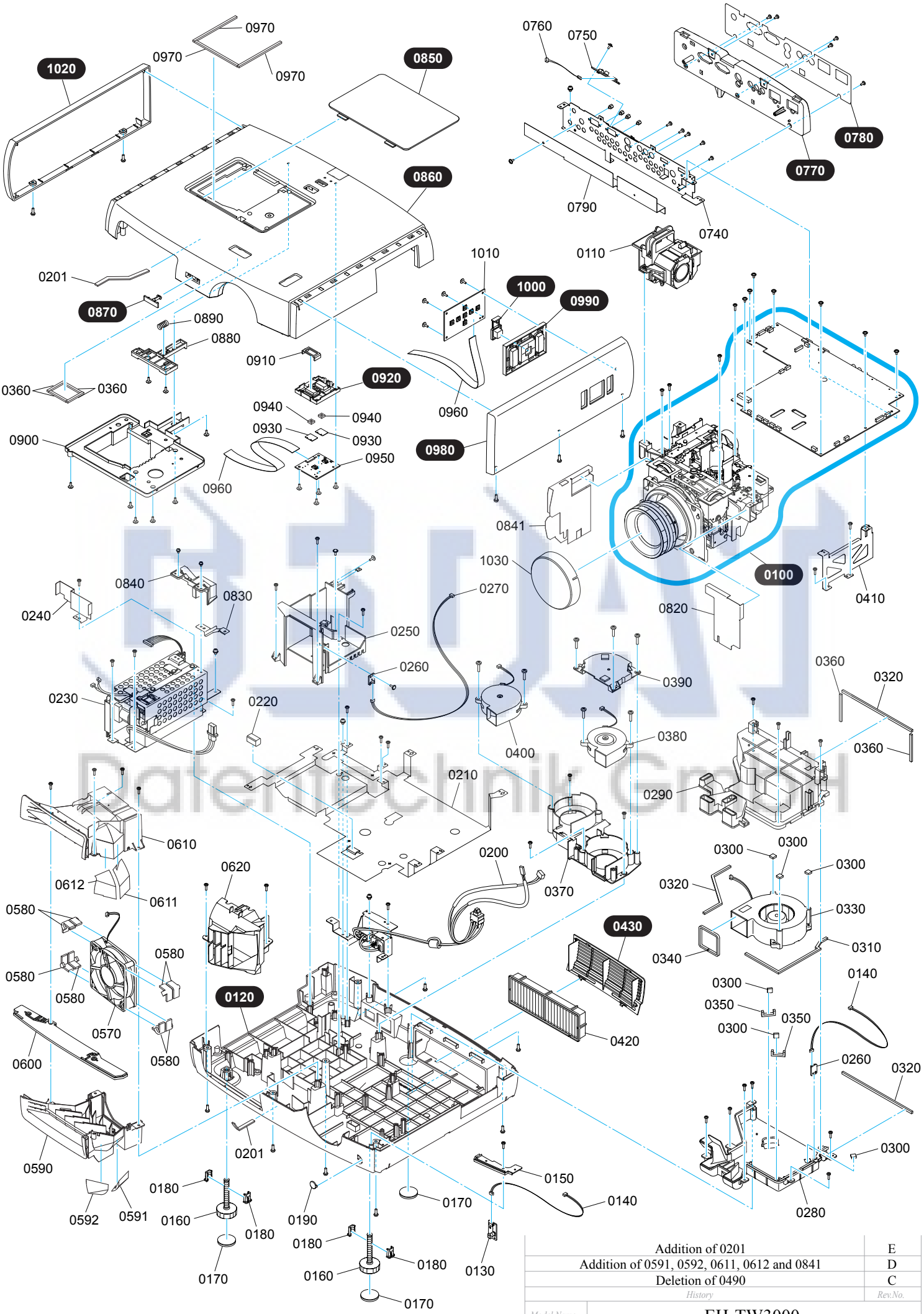

History	Rev.No.
Addition of 0201	E
Addition of 0591, 0592, 0611, 0612 and 0841	D
Deletion of 0490	C

Model Name: EH-TW3000

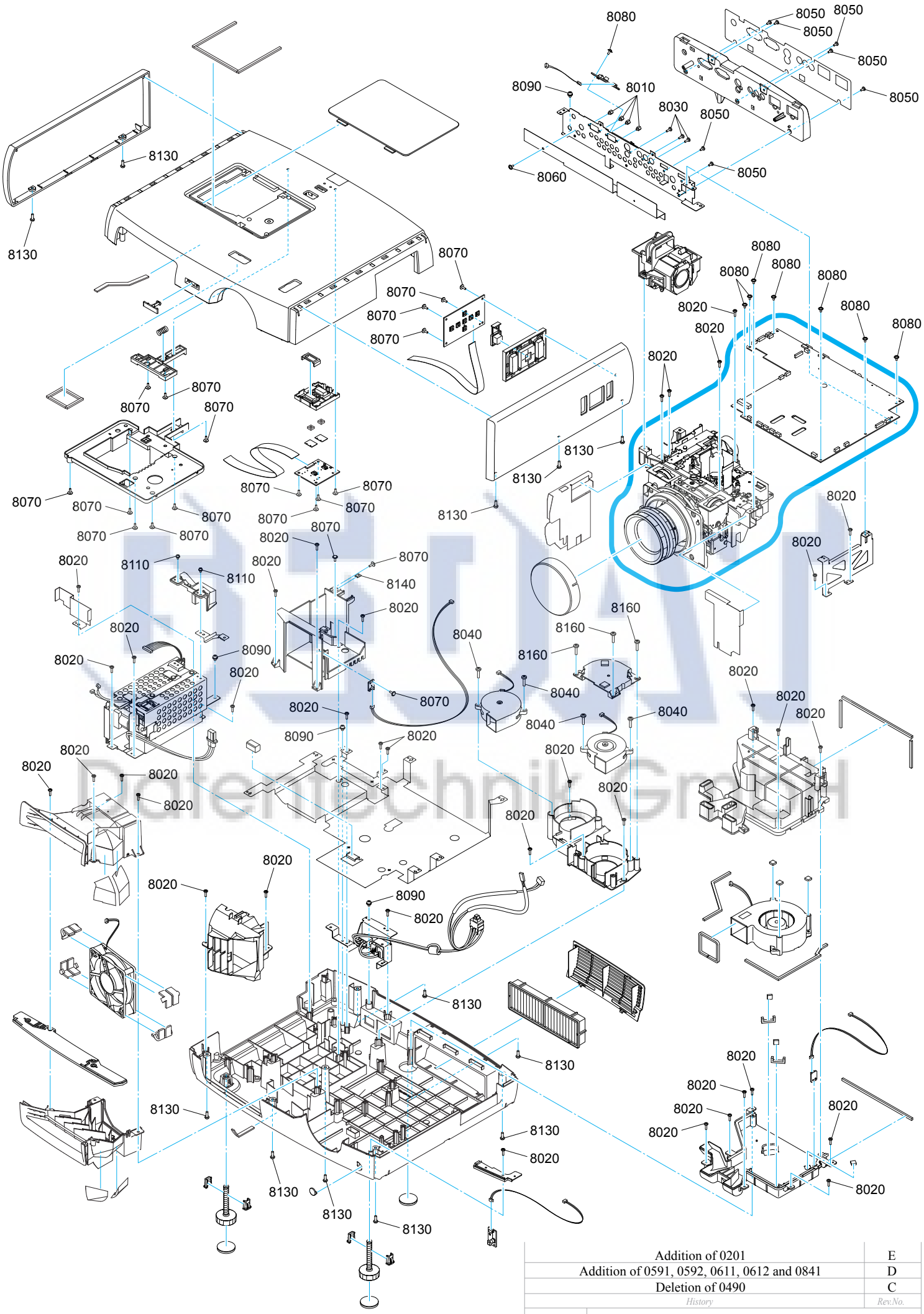

Addition of 0201	E
Addition of 0591, 0592, 0611, 0612 and 0841	D
Deletion of 0490	C
History	Rev.No.
Model Name	EH-TW3000

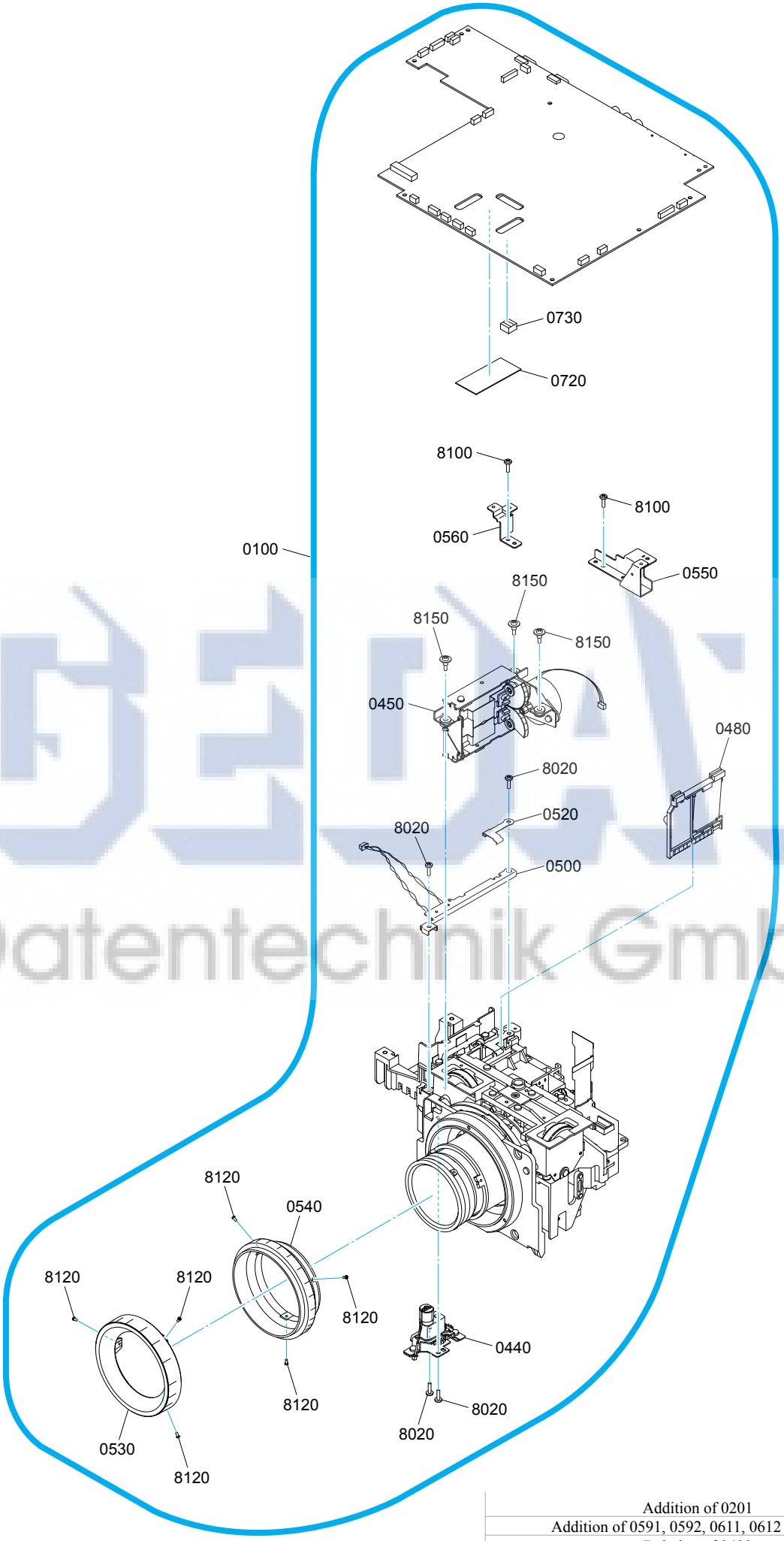

	History	Rev.No.
	Addition of 0201	E
	Addition of 0591, 0592, 0611, 0612 and 0841	D
	Deletion of 0490	C
Model Name	EH-TW3000	

GEHAY Datentechnik GmbH

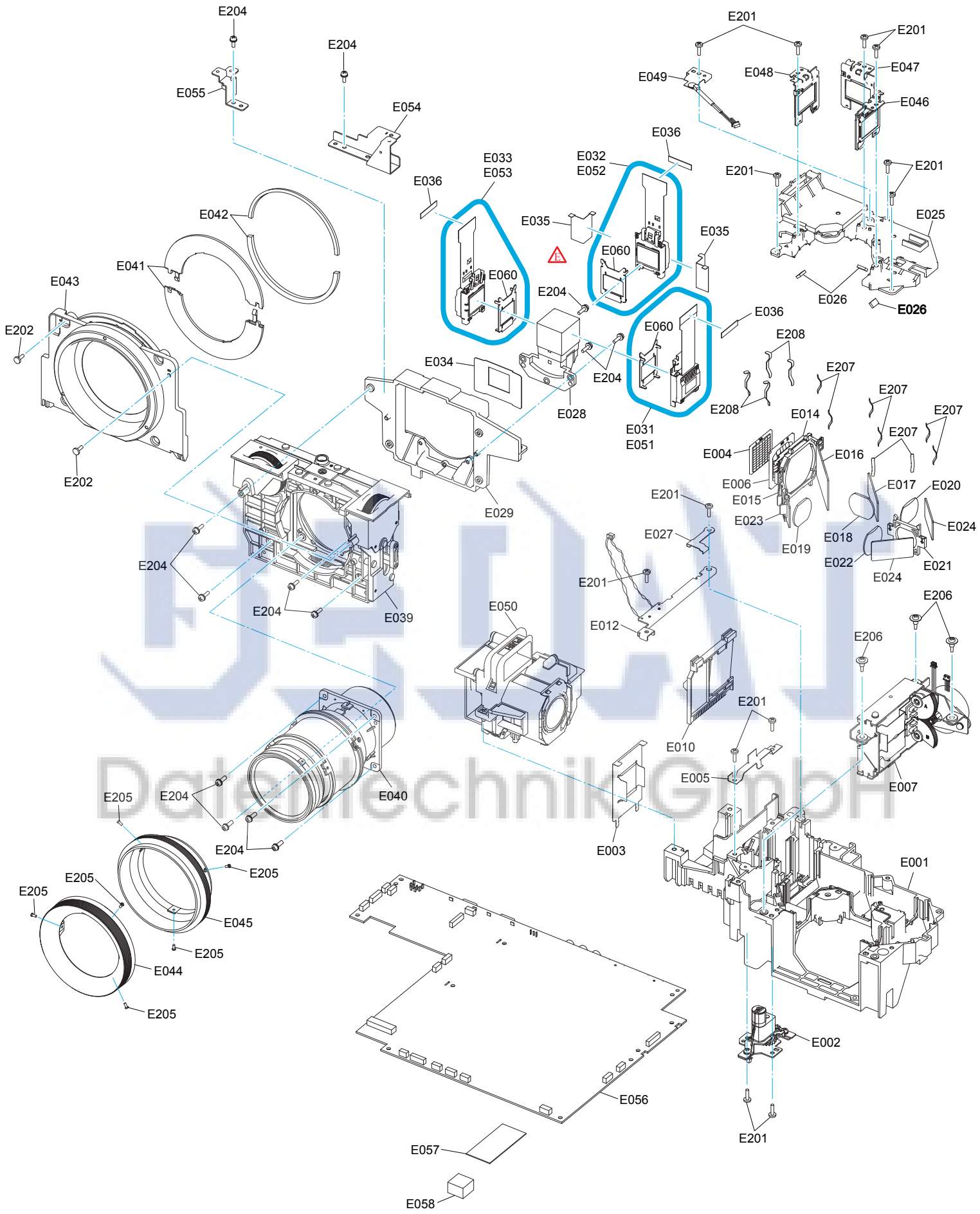

	History	Rev.No.
	Addition of E060	E
	Deletion of E009	D
	Deletion of E011	C
	The whole was reviewed.	B
	First Release	A
Model Name	EH-TW3000	