[A] Only in EB-1485FT/1485Fi/1480FT/1480Fi

[B] Only in EH-LS500W/LS500B

INTERNAL USE ONLY

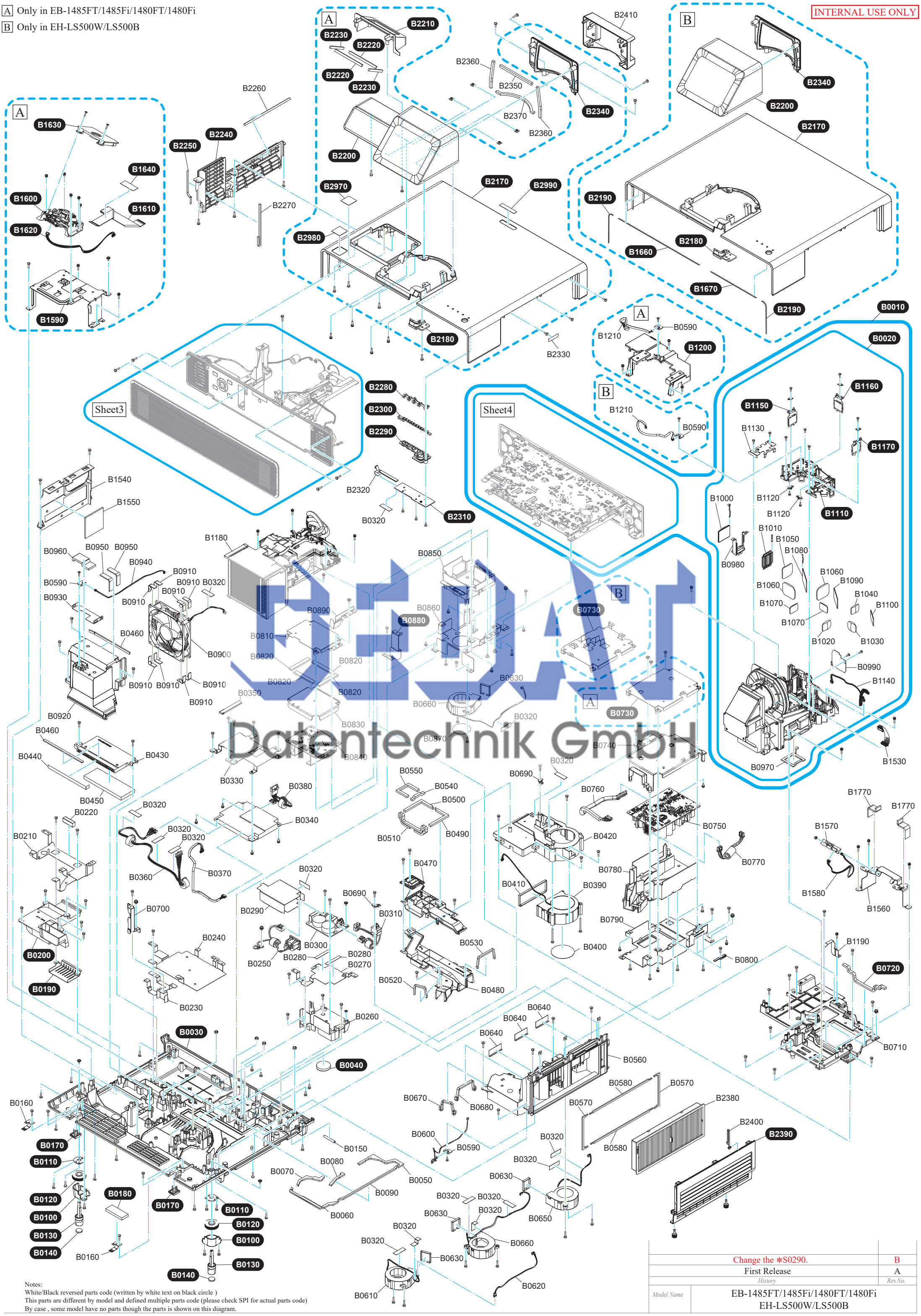

BEDA Datentechnik GmbH

Notes:
White/Black reversed parts code (written by white text on black circle)
This parts are different by model and defined multiple parts code (please check SPI for actual parts code)
By case , some model have no parts though the parts is shown on this diagram.

History	Rev.No.
Change the ＊S0290.	B
First Release	A

Model Name	EB-1485FT/1485Fi/1480FT/1480Fi EH-LS500W/LS500B

INTERNAL USE ONLY

[A] Only in EB-1485FT/1485Fi/1480FT/1480Fi

[B] Only in EH-LS500W/LS500B

*S0150 Only in EB-1485FT/1485Fi/1480FT/1480Fi
*S0070 / *S0290 Only in EH-LS500W/LS500B [B]
*S0020 / *S0170 / *S0210 Only in EH-LS500B

Sheet3

Sheet4

BEDA Datentechnik GmbH

Notes:
White/Black reversed parts code (written by white text on black circle)
This parts are different by model and defined multiple parts code (please check SPI for actual parts code)
By case , some model have no parts though the parts is shown on this diagram.

History	Rev.No.
Change the *S0290.	B
First Release	A

Model Name	EB-1485FT/1485Fi/1480FT/1480Fi EH-LS500W/LS500B

A Only in EB-1485FT/1485Fi/1480FT/1480Fi

B Only in EH-LS500W/LS500B

INTERNAL USE ONLY

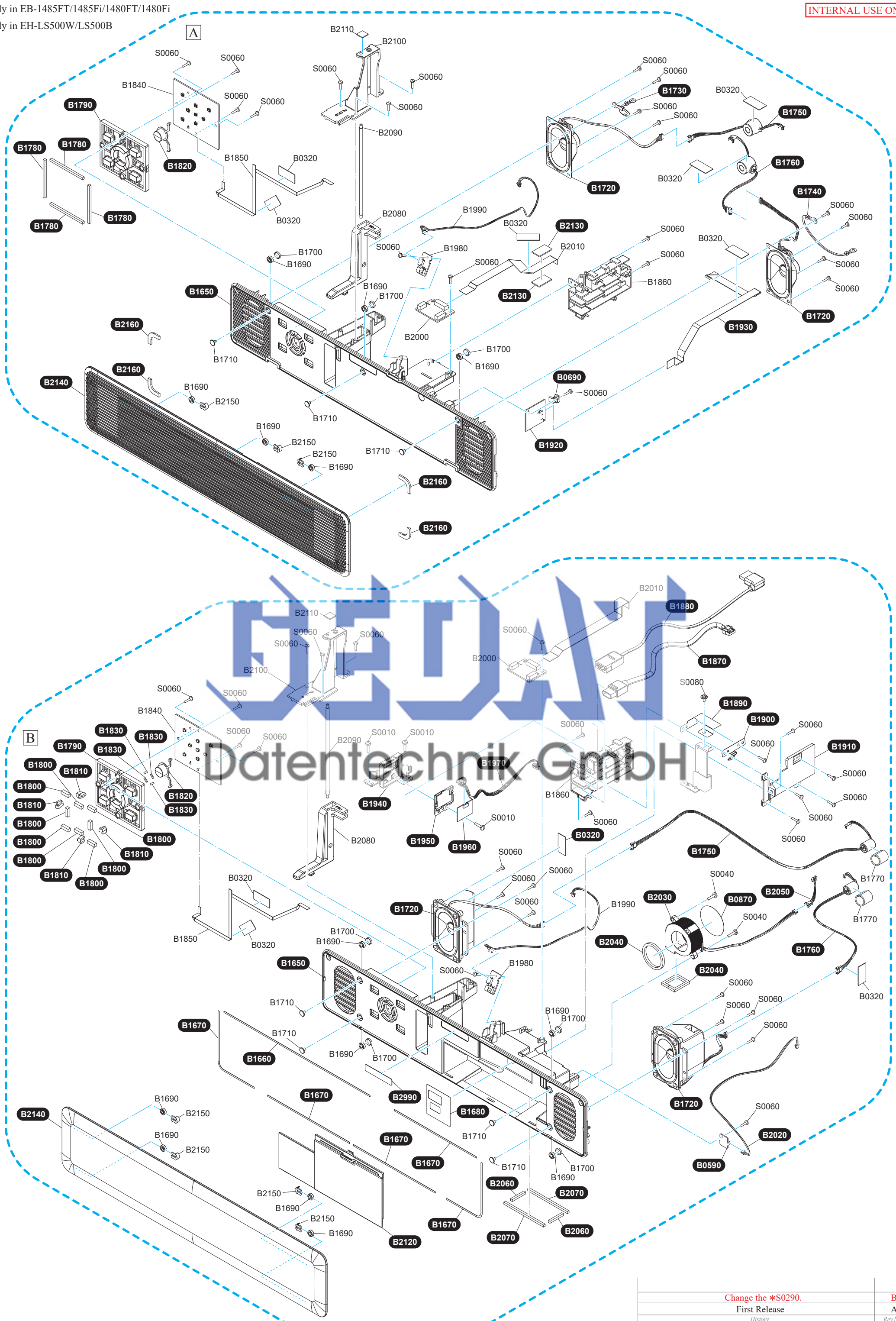

SERVICE Datentechnik GmbH

Notes:
White/Black reversed parts code (written by white text on black circle)
This parts are different by model and defined multiple parts code (please check SPI for actual parts code)
By case , some model have no parts though the parts is shown on this diagram.

History	Rev.No.
Change the ＊S0290.	B
First Release	A

Model Name	EB-1485FT/1485Fi/1480FT/1480Fi EH-LS500W/LS500B

A Only in EB-1485FT/1485Fi
B Only in EB-1485FT/1485Fi/1480FT/1480Fi
C Only in EH-LS500W/LS500B

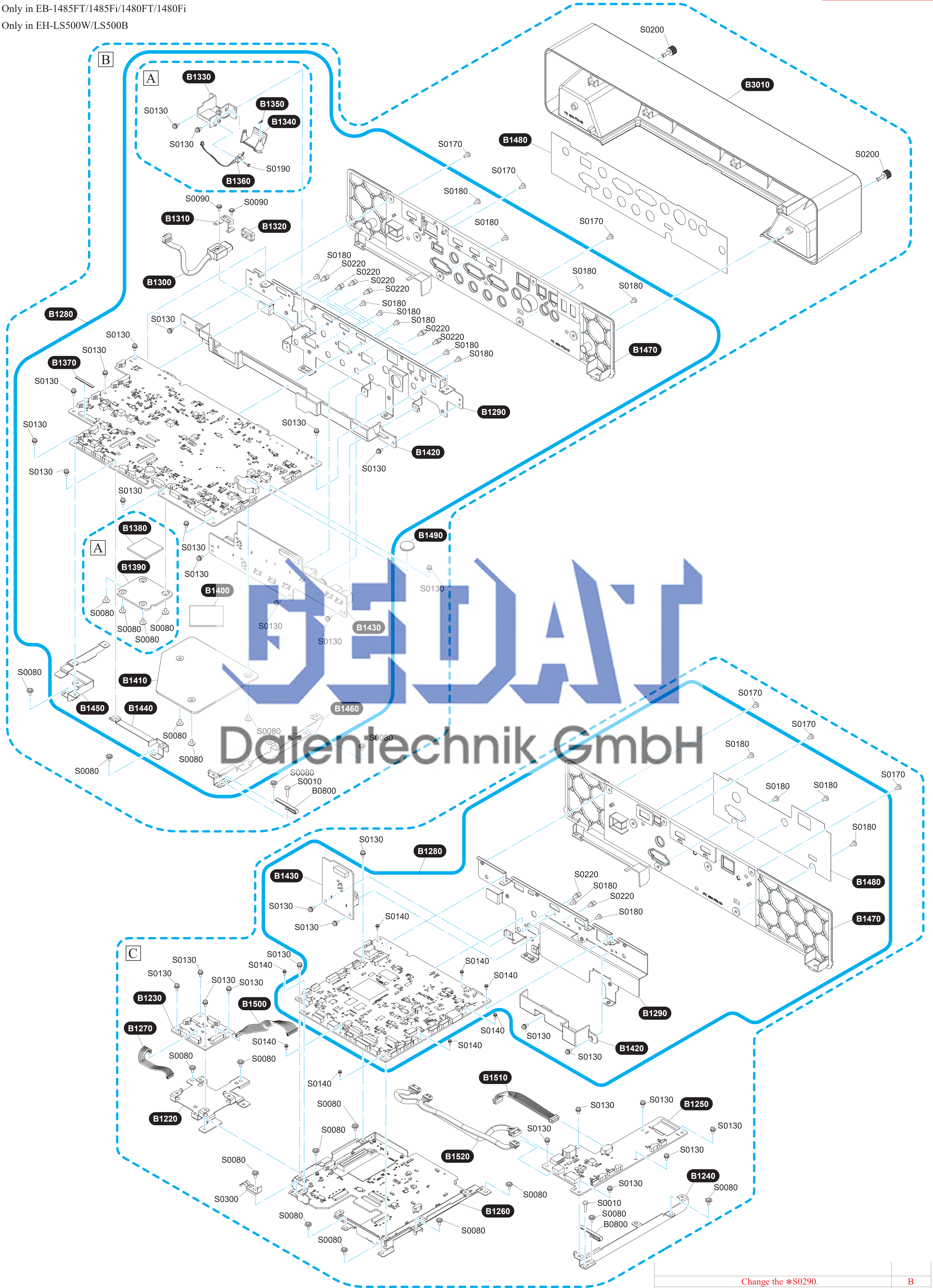

BEDAT Datentechnik GmbH

Notes:
White/Black reversed parts code (written by white text on black circle)
This parts are different by model and defined multiple parts code (please check SPI for actual parts code)
By case , some model have no parts though the parts is shown on this diagram.

History	Rev.No.
Change the *S0290.	B
First Release	A
Model Name	EB-1485FT/1485Fi/1480FT/1480Fi EH-LS500W/LS500B

INTERNAL USE ONLY

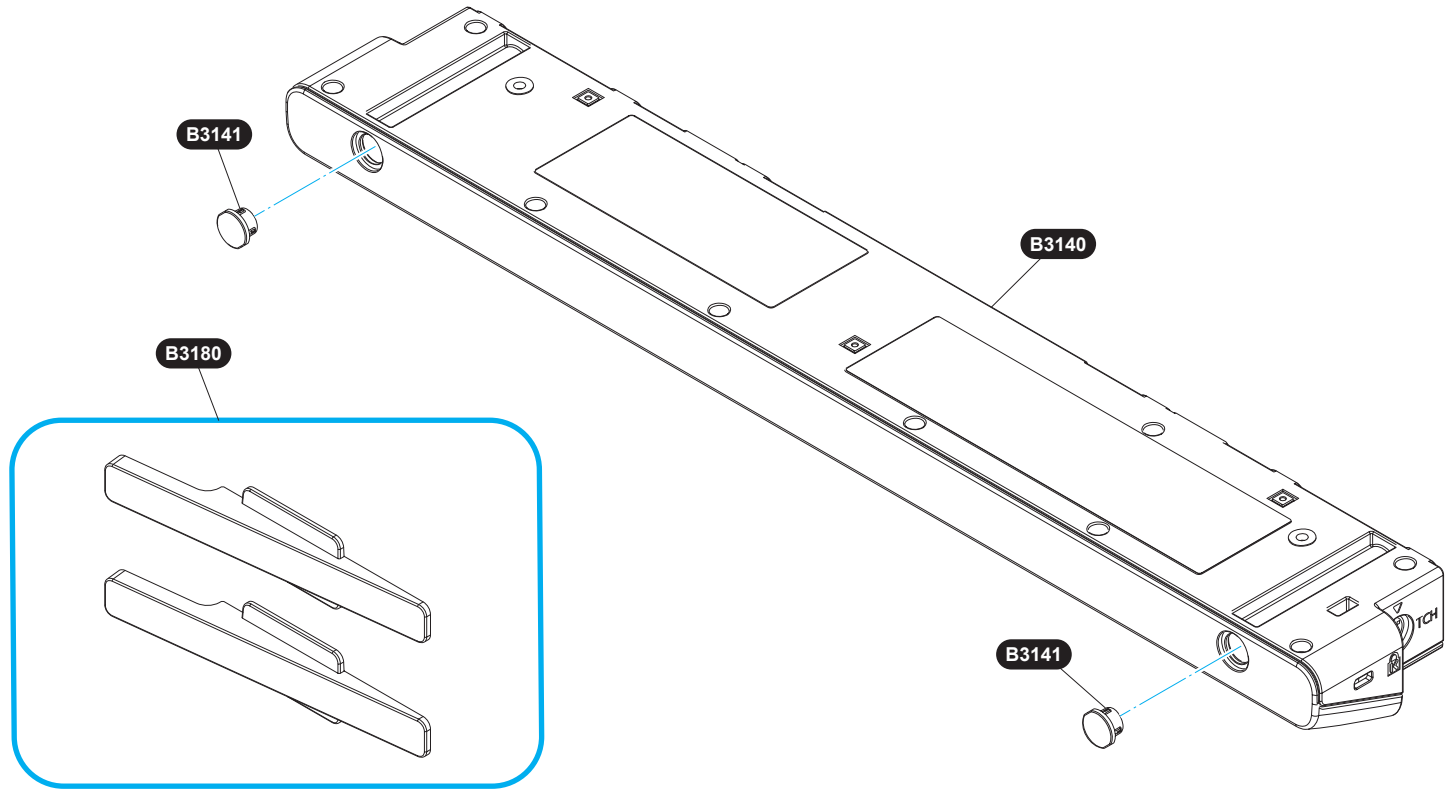

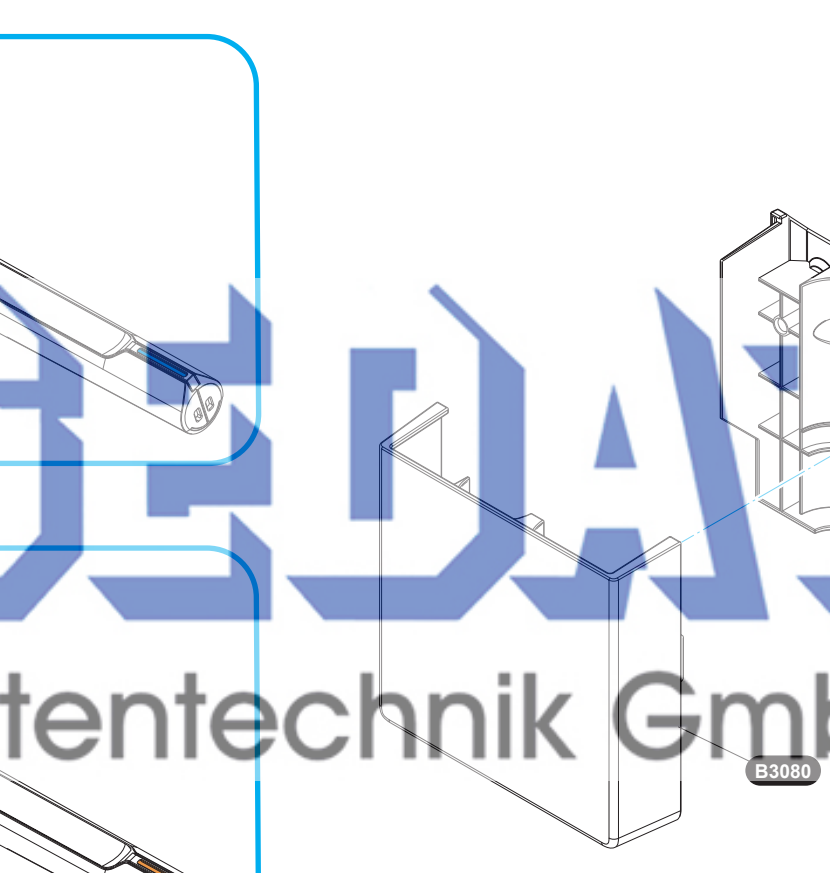

EBDAT Datentechnik GmbH

Change the ＊S0290.	B
First Release	A
History	*Rev.No.*
Model Name	EB-1485FT/1485Fi/1480FT/1480Fi

Notes:
White/Black reversed parts code (written by white text on black circle)
This parts are different by model and defined multiple parts code (please check SPI for actual parts code)
By case , some model have no parts though the parts is shown on this diagram.

A Only in EB-1485FT/1485Fi

B Only in EB-1480FT/1480Fi

INTERNAL USE ONLY

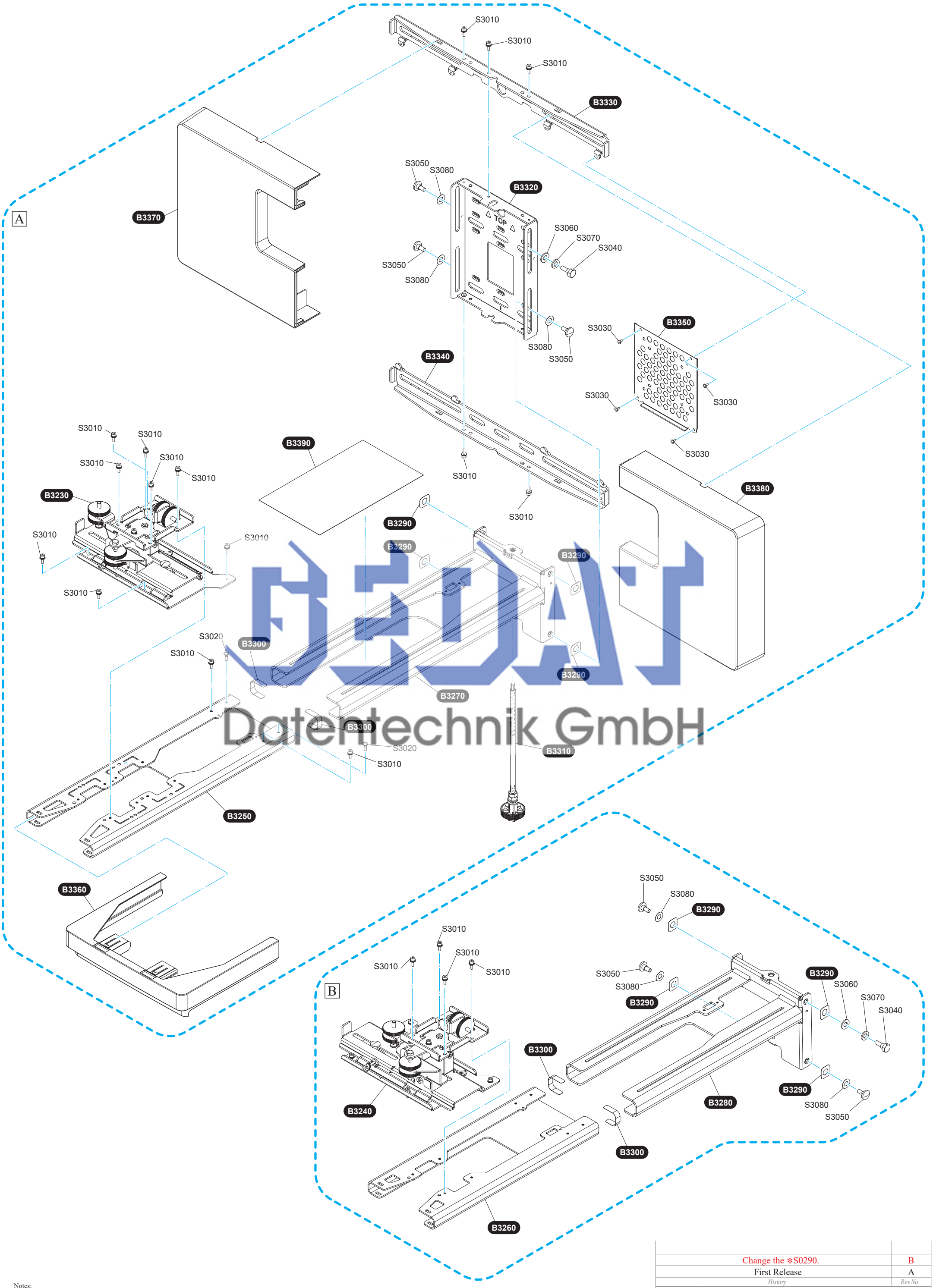

DEDAT Datentechnik GmbH

Notes:
White/Black reversed parts code (written by white text on black circle)
This parts are different by model and defined multiple parts code (please check SPI for actual parts code)
By case , some model have no parts though the parts is shown on this diagram.

History	Rev.No.
Change the ✻S0290.	B
First Release	A

Model Name	EB-1485FT/1485Fi/1480FT/1480Fi

A Only in EB-1485FT/1485Fi/1480FT/1480Fi

B Only in EB-1485FT/1485Fi

C Only in EH-LS500W/LS500B

INTERNAL USE ONLY

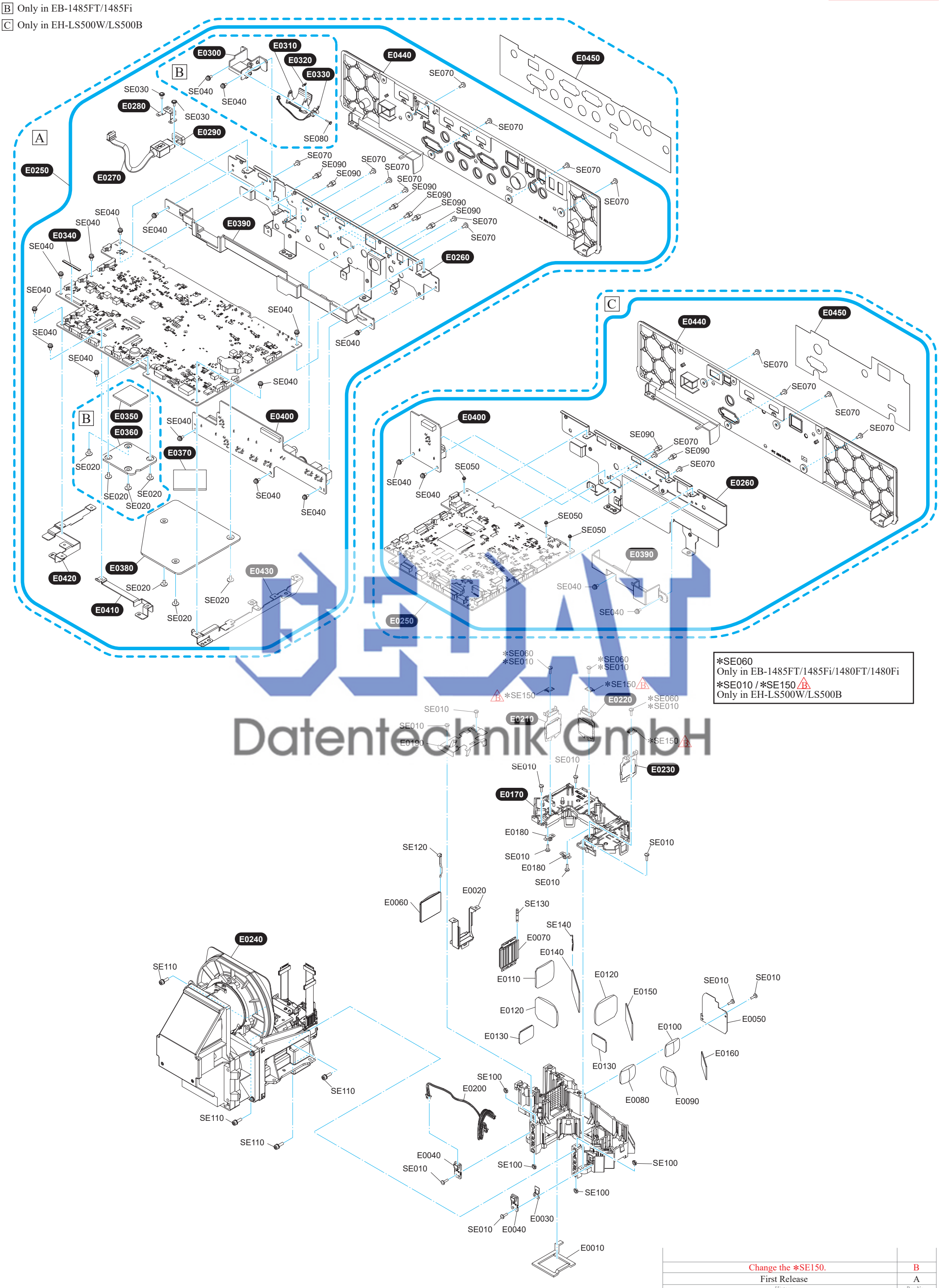

*SE060
Only in EB-1485FT/1485Fi/1480FT/1480Fi

*SE010 / *SE150 B
Only in EH-LS500W/LS500B

DENAT Datentechnik GmbH

Notes:
White/Black reversed parts code (written by white text on black circle)
This parts are different by model and defined multiple parts code (please check SPI for actual parts code)
By case , some model have no parts though the parts is shown on this diagram.

History	Rev.No.
Change the *SE150.	B
First Release	A

Model Name	EB-1485FT/1485Fi/1480FT/1480Fi EH-LS500W/LS500B