PARTS CATALOG

Image Reader-B1/iR2200i/ 2800i/3300i Rev.00-00

Canon

Apr 25 2008

PREFACE

This Parts Catalog contains listings of parts used

Diagrams are provided with the listings to aid the service technician in identifying clearly, the item to be orderd.
Whenever ordering parts, consult this Parts Catalog for all of the information pertaining to each item. Be sure to include, in the Parts Request, the full item description, the item part number, and the quantity.

COPYRIGHT (C) 1999 CANON INC.

Use of this manual should be strictly supervised to avoid disclosure of confidential information.

Contents

NUMERICAL INDEX

Image Reader-B1(Numerical Index) 1-1
iR2200i/2800i/3300i(Numerical Index) 1-2
Cassette Feeding Unit-W1(Numerical Index) 1-12
Paper Deck-L1(Numerical Index) 1-14
Inner 2way Tray-A1(Numerical Index) 1-17
Envelope Feeder Attachment-B1(Numerical Index) 1-18
Token Ring Network Interface Adapter iN-TR2(Numerical Index) ... 1-18
Super G3 FAX Board-J1/J2(Numerical Index) 1-19
CONTROL FONT ROM CFR-M1(Numerical Index) 1-20

Image Reader-B1(Parts Catalog)

A ASSEMBLY LOCATION DIAGRAM 2-1
001 MOUNTING HARDWARE 1 2-2
002 MOUNTING HARDWARE 2 2-4
210 READER ASSEMBLY 2-5
420 MIRROR ASSEMBLY 1 2-11
430 MIRROR ASSEMBLY 2 2-12
931 READER CONTROLLER PCB ASSEMBLY 2-13
B1 LIST OF CONNECTORS 2-14
B2 LIST OF ELECTRIC PARTS 2-18

iR2200i/2800i/3300i(Parts Catalog)

A ASSEMBLY LOCATION DIAGRAM 3-1
100 EXTERNAL COVERS, PANELS, ETC. 3-4
101 MACHINE FRONT PLATE 3-8
102 INTERNAL COMPONENTS 1 3-10
103 INTERNAL COMPONENTS 2 3-12
104 INTERNAL COMPONENTS 3 3-15
105 INTERNAL COMPONENTS 4 3-17
106 INTERNAL COMPONENTS 5 3-19
107 MACHINE REAR PLATE 3-21
110 POWER CORD TERMINAL ASSEMBLY (100/120V) 3-24
111 POWER CORD TERMINAL ASSEMBLY(220/240V) 3-25
120 RIGHT DOOR ASSEMBLY 3-26
130 CONTROL PANEL ASSEMBLY 3-29
190 DEVELOPING FAN ASSEMBLY 3-31
191 MACHINE EXHAUST FAN ASSEMBLY 3-32

Contents

250 MAIN DRIVE ASSEMBLY 3-33
260 PAPER PICK-UP DRIVE ASSEMBLY 3-34
261 DUPLEXING DRIVE ASSEMBLY 3-36
280 FIXING FEEDER DRIVE ASSEMBLY 3-37
300 CASSETTE 3-38
310 PAPER PICK-UP MOUNT ASSEMBLY 3-41
315 MULTI FEEDER TRAY ASSEMBLY 3-46
320 REGISTRATION FRONT GUIDE ASSEMBLY 3-48
330 PAPER FEEDER ASSEMBLY 3-50
350 PAPER DELIVERY ASSEMBLY 3-53
351 LEFT VERTICAL PATH ASSEMBLY 3-55
360 DUPLEXING FEEDER ASSEMBLY 3-57
460 SCANNER ASSEMBLY 3-59
500 DRUM CARTRIDGE ASSEMBLY 3-60
640 DEVELOPING ASSEMBLY 3-61
810 FIXING ASSEMBLY 3-64
900 CONTROLLER BOX ASSEMBLY 3-67
910 HV POWER SUPPLY PCB ASSEMBLY 3-70
920 CONTROL PANEL INVERTER PCB ASSEMBLY 3-71
921 CONTROL PANEL CPU PCB ASSEMBLY 3-72
922 CONTROL PANEL PCB ASSEMBLY 3-73
930 DC CONTROLLER PCB ASSEMBLY 3-74
940 PAPER PICK-UP PCB ASSEMBLY 3-75
950 RESOLUTION CONVERSION PCB ASSEMBLY 3-76
B1 LIST OF CONNECTORS 3-77
B2 LIST OF MOTORS 3-95
B3 LIST OF FAN MOTORS 3-96
B4 LIST OF SENSORS 3-97
B5 LIST OF CLUTCHES, AND OTHERS 3-99
B6 LIST OF HEATERS, LAMPS, ETC. 3-100
B7 LIST OF PCBS 3-102

Cassette Feeding Unit-W1(Parts Catalog)

ZA ASSEMBLY LOCATION DIAGRAM 4-1
Z10 EXTERNAL COVERS, PANELS, ETC. 4-2
Z11 INTERNAL COMPONENTS 4-3
Z12 RIGHT DOOR ASSEMBLY 4-7
Z20 MAIN DRIVE ASSEMBLY 4-8
Z32 CASSETTE HEATER ASSEMBLY (ACCESSORY) 4-9
Z35 VERTICAL PATH ASSEMBLY 4-10
Z40 PAPER PICK-UP ASSEMBLY 4-11
Z90 DC CONTROLLER PCB ASSEMBLY 4-16
Z91 PEDESTAL PICK-UP PCB ASSEMBLY 4-17
ZB1 LIST OF CONNECTORS 4-18

Contents

ZB2 LIST OF ELECTRIC PARTS 4-21

Paper Deck-L1(Parts Catalog)

RA ASSEMBLY LOCATION DIAGRAM 5-1
R01 MOUNTING HARDWARE 5-2
R10 EXTERNAL COVERS, PANELS, ETC 5-4
R11 INTERNAL COMPONENTS 5-7
R30 PAPER STOCK ASSEMBLY 5-10
R35 PAPER DECK HEATER ASSEMBLY (ACCESSORY) 5-13
R40 PAPER PICK-UP ASSEMBLY 5-15
RB1 LIST OF CONNECTORS 5-19
RB2 LIST OF ELECTRIC PARTS 5-23

Inner 2way Tray-A1(Parts Catalog)

QA ASSEMBLY LOCATION DIAGRAM 6-1
Q01 MOUNTING HARDWARE 6-2
Q30 DELIVERY ASSEMBLY 6-4
QB1 LIST OF CONNECTORS 6-9
QB2 LIST OF ELECTRIC PARTS 6-11

Envelope Feeder Attachment-B1(Parts Catalog)

LA ASSEMBLY LOCATION DIAGRAM 7-1
L10 ENVELOPE FEEDER ATTACHMENT 7-2

Token Ring Network Interface Adapter iN-TR2(Parts Catalog)

NA ASSEMBLY LOCATION DIAGRAM 8-1
N90 TOKENRING BOARD PCB ASSEMBLY 8-2

Super G3 FAX Board-J1/J2(Parts Catalog)

GA ASSEMBLY LOCATION DIAGRAM 9-1
G90 SUPER G3 FAX KIT 9-2
G91 SPEAKER ASSEMBLY 9-5
GB1 LIST OF CONNECTORS 9-6
GB2 LIST OF ELECTRIC PARTS 9-9

CONTROL FONT ROM CFR-M1(Parts Catalog)

EA ASSEMBLY LOCATION DIAGRAM 10-1
E90 CONTROL FONT ROM 10-2

NUMERICAL INDEX
Image Reader-B1(Numerical Index)

PARTS NUMBER	FIGURE & KEY NO.	PARTS NUMBER	FIGURE & KEY NO.	PARTS NUMBER	FIGURE & KEY NO
FB1-7109-000	210 - 44	FF3-4279-000	210 - 9	FH2-6856-000	B1 - J2
FB3-2398-020	210 - 45	FF3-4280-000	210 - 37	FH2-6856-000	B1 - J9200
FB3-2411-000	420 - 1	FF3-4284-000	210 - 10	FH3-0932-010	931 - L924
FB3-2411-000	430 - 1	FF5-9816-000	210 - 11	FH3-7211-020	210 - 18
FB4-5402-030	210 - 1	FF5-9820-020	210 - 49	FH3-7211-020	B2 - 19
FB4-5434-000	420 - 2	FF5-9821-030	210 - 50	FH4-5855-010	931 - IC920
FB4-5435-000	430 - 3	FF6-0328-000	210 - 14	FH4-5987-000	931 - IC405
FB5-3046-030	210 - 46	FF6-0329-000	210 - 15	FH4-6102-020	931 - IC407
FB5-3052-000	210 - 17A	FF6-0331-000	210 - 62	FH4-6300-000	931 - IC404
FB5-3058-000	210 - 2	FF6-0333-000	420 - 6	FH6-1857-000	210 - 33
FB5-3059-000	210 - 3	FF6-0334-000	430 - 5	FH6-1857-000	B2 - M400
FB5-3085-020	210 - 29	FF6-0340-000	210 - 16	FH7-4665-020	210 - 27
FB5-3086-020	210 - 30	FF6-0342-000	210 - 12	FH7-4665-020	B2 - H4
FB5-3087-000	210 - 31	FF6-0346-000	210 - 23	FH7-4666-020	210 - 19
FB5-3090-000	210 - 34	FF6-0384-020	210 - 13	FH7-4666-020	B2 - H5
FB5-3498-000	210 - 26	FF6-1484-000	001 - 3	FH7-7550-020	210 - 20
FB5-3635-000	210 - 35	FF6-2006-000	001 - 2	FH7-7550-020	B2 - SD1
FB5-3636-000	210 - 36	FF9-1858-000	210 - 17	FH7-7557-020	210 - 38
FB5-3637-000	210 - 75	FF9-1859-000	210 - 17	FH7-7557-020	210 - 51
FB5-4535-000	210 - 17B	FF9-1860-000	210 - 17	FH7-7557-020	B2 - PS400
FB5-4553-000	210 - 17B	FF9-1861-000	210 - 17	FH7-7557-020	B2 - PS401
FB5-4554-000	210 - 17B	FG3-1679-000	210 - 40	FK2-0247-000	B1 - J4100
FB5-4555-000	210 - 17B	FG3-1680-000	210 - 70	FK2-0248-000	931 - IC424
FB5-4557-000	210 - 17A	FG3-1681-000	931 -	FS2-9540-000	002 - 1
FB5-4558-000	210 - 17A	FG3-1681-000	B2 - 17	FS2-9542-020	002 - 2
FB5-4559-000	210 - 17A	FG3-1682-000	210 - 71	FS5-3826-000	210 - 32
FB5-4586-000	210 - 11A	FG3-1682-000	B2 - 21	FS5-9227-020	210 - 39
FB5-5206-000	210 - 4	FG3-1683-000	210 - 55	FS5-9642-000	210 - 52
FB5-5211-000	420 - 3	FG3-1736-070	931 - 1	FS5-9665-040	001 - 5
FB5-5212-000	420 - 4	FG3-2397-000	210 - 63	FS6-2341-000	420 - 7
FB5-5213-000	420 - 5	FG3-2398-000	210 - 69A	FS6-2913-000	210 - 21
FB5-5216-000	210 - 74	FG3-2398-000	210 - 69C	FS6-8478-000	210 - 64
FB5-5219-000	210 - 73	FG3-2399-000	210 - 69B	FS7-2399-000	210 - 22
FB5-5221-000	210 - 7	FG6-4971-000	210 - 53	NPN	001 -
FB5-5226-00U	430 - 4	FG6-4985-020	210 - 57	NPN	002 -
FB5-5228-000	210 - 47	FG6-5956-020	210 - 72	NPN	210 -
FB5-5239-000	210 - 6	FG6-6018-000	420 -	NPN	B1 -
FB5-5458-000	210 - 66	FG6-6019-000	430 -	NPN	B1 - J2000
FB5-5462-000	210 - 67	FG6-6028-000	420 - 8	NPN	B1 - J2020
FB5-5467-000	210 - 68	FG6-6028-000	B2 - LAMP1	NPN	B1 - J2020
FB5-5544-000	210 - 48	FG6-7978-000	210 - 69	NPN	B1 - J4010
FB5-5551-000	210 - 42	FG6-7978-000	B2 - 20	NPN	B1 - J4052
FB5-5555-000	210 - 58	FG6-7982-000	210 - 28	NPN	B1 - J4053
FB5-5567-000	210 - 12A	FG6-7982-000	B2 - 18	NPN	B1 - J4060
FB5-5593-000	210 - 59	FH2-5821-000	B1 - J2	NPN	B1 - J4061
FB6-0334-000	001 - 1	FH2-5821-000	B1 - J9200	NPN	B2 -
FB6-0340-000	210 - 60	FH2-5825-000	B1 - J9200	PCB	B1 - J400
FB6-0342-000	430 - 2	FH2-6552-000	210 - 8	PCB	B1 - J401
FB6-0344-000	210 - 61	FH2-6756-020	210 - 5	PCB	B1 - J402
FF3-4267-000	210 - 54	FH2-6756-020	B1 - J5502	PCB	B1 - J403
FF3-4269-000	210 - 28A	FH2-6756-020	B1 - J9202	PCB	B1 - J404
FF3-4273-000	210 - 41	FH2-6855-000	B1 - J9200	PCB	B1 - J405

PCB	B1	-	J406
PCB	B1	-	J407
PCB	B1	-	J408

PARTS NUMBER	FIGURE & KEY NO.			PARTS NUMBER	FIGURE & KEY NO.			PARTS NUMBER	FIGURE & KEY NO		
PCB	B1	-	J409	VS3-5083-004	B1	-	J602	XD3-1250-142	210	-	506
PCB	B1	-	J411	VS3-5083-004	B1	-	J4030	XG9-0250-000	210	-	25
PCB	B1	-	J600	WE8-5858-000	210	-	40A				
PCB	B1	-	J601	WE8-5858-000	210	-	70A				
PCB	B1	-	J602	WS3-5160-000	B1	-	J400				
PCB	B1	-	J603	WS3-5160-000	B1	-	J403				
PCB	B1	-	J2000	WS3-5160-000	B1	-	J602				
PCB	B1	-	J4021	WS3-5160-000	B1	-	J603				
PCB	B1	-	J4061	WS3-5160-000	B1	-	J4030				
PCB	B1	-	J5501	WS3-5160-000	B1	-	J4101				
PCB	B1	-	J5502	WS3-5160-000	B1	-	J5602				
PCB	B1	-	J5503	WS3-5264-000	B1	-	J2				
PCB	B1	-	J5602	WS3-5264-000	B1	-	J9200				
RH2-5191-000	210	-	56	WS3-5301-000	B1	-	J4030				
SYS	B1	-	J2	WS3-5301-000	B1	-	J4101				
SYS	B1	-	J4100	WS3-5569-000	B1	-	J401				
SYS	B1	-	J9202	WS3-5569-000	B1	-	J411				
VD7-2865-001	931	-	FU921	WS3-5569-000	B1	-	J4010				
VS1-5452-007	B1	-	J404	WS3-5569-000	B1	-	J5503				
VS1-5452-007	B1	-	J4100	WS3-5596-000	B1	-	J4100				
VS1-5729-002	B1	-	J4101	WT2-5565-000	210	-	9A				
VS1-5729-004	B1	-	J4030	WT2-5565-000	210	-	53A				
VS1-6302-003	B1	-	J411	XA9-0425-030	430	-	6				
VS1-6302-003	B1	-	J5503	XA9-0642-000	210	-	65				
VS1-6302-006	B1	-	J401	XA9-0721-010	210	-	24				
VS1-6302-006	B1	-	J4010	XA9-1031-000	001	-	4				
VS1-6313-004	B1	-	J601	XB1-2300-407	210	-	501				
VS1-6313-011	B1	-	J600	XB1-2300-609	210	-	509				
VS1-6314-003	B1	-	J406	XB1-2300-609	210	-	511				
VS1-6314-004	B1	-	J402	XB1-2300-609	210	-	518				
VS1-6314-004	B1	-	J4021	XB1-2401-007	001	-	501				
VS1-6314-005	B1	-	J408	XB2-7400-607	210	-	519				
VS1-6314-005	B1	-	J4020	XB2-7400-609	210	-	512				
VS1-6314-006	B1	-	J405	XB2-8300-809	420	-	501				
VS1-6314-010	B1	-	J407	XB3-6400-800	210	-	502				
VS1-6320-003	B1	-	J4051	XB3-6400-800	210	-	510				
VS1-6321-003	B1	-	J4052	XB3-6400-800	210	-	513				
VS1-6321-003	B1	-	J4053	XB3-6400-800	210	-	514				
VS1-6321-003	B1	-	J4060	XB3-6400-800	210	-	517				
VS1-6407-080	B1	-	J409	XB3-6401-205	210	-	515				
VS1-6407-080	B1	-	J5501	XB6-2400-508	210	-	507				
VS1-7173-005	210	-	41A	XB6-7300-409	210	-	503				
VS1-7173-005	B1	-	J4020	XB6-7300-409	420	-	502				
VS1-7177-003	210	-	37A	XB6-7300-607	210	-	521				
VS1-7177-003	210	-	43	XB6-7501-007	210	-	520				
VS1-7177-003	B1	-	J4051	XB7-1030-069	430	-	501				
VS1-7177-003	B1	-	J4060	XB7-1030-169	420	-	503				
VS3-5083-002	B1	-	J400	XD2-1100-502	430	-	502				
VS3-5083-002	B1	-	J603	XD2-1100-642	210	-	504				
VS3-5083-002	B1	-	J4101	XD2-1100-642	210	-	505				
VS3-5083-003	B1	-	J5602	XD2-1100-642	210	-	508				
VS3-5083-004	B1	-	J403	XD2-1100-642	210	-	516				

iR2200i/2800i/3300i(Numerical Index)

NUMERICAL INDEX
iR2200i/2800i/3300i(Numerical Index)

PARTS NUMBER	FIGURE & KEY NO.	PARTS NUMBER	FIGURE & KEY NO.	PARTS NUMBER	FIGURE & KEY NO
FA1-0056-000	103 - 1	FB3-2836-000	315 - 6	FB5-2195-000	130 - 12C
FA1-0056-000	330 - 25	FB3-2894-020	310 - 9	FB5-2295-000	922 - 1
FA4-1159-000	120 - 1	FB3-2896-000	310 - 10	FB5-3577-000	315 - 4
FA6-5618-000	500 - 8	FB3-2897-020	310 - 12	FB5-3578-000	315 - 5
FA9-2112-000	250 - 2	FB3-2898-020	310 - 13	FB5-3698-010	130 - 4
FA9-2112-000	260 - 1	FB3-2922-000	300 - 12	FB5-3699-000	130 - 5
FA9-3313-030	300 - 23	FB3-2926-000	300 - 13	FB5-3718-000	130 - 12B
FA9-3314-030	300 - 24	FB3-2927-000	300 - 14	FB5-3718-000	922 - 3
FA9-3967-000	120 - 20	FB3-2928-000	300 - 25	FB5-3811-000	300 - 3
FA9-3967-000	120 - 32	FB3-2930-000	300 - 15	FB5-3812-000	300 - 26
FB1-5816-000	640 - 1	FB3-2934-000	300 - 16	FB5-3813-000	300 - 27
FB1-6710-000	640 - 2	FB3-2937-000	101 - 4	FB5-3928-000	101 - 2
FB1-6718-000	640 - 3	FB3-2942-000	300 - 1	FB5-4711-000	320 - 5
FB1-6719-000	640 - 4	FB3-2943-000	300 - 2	FB5-4713-020	320 - 6
FB1-6841-000	351 - 1	FB3-2947-000	101 - 8	FB5-4714-000	320 - 7
FB1-7099-030	280 - 1	FB3-2953-000	300 - 17	FB5-4720-000	103 - 29
FB1-7157-020	100 - 26	FB3-2955-000	300 - 18	FB5-4722-020	320 - 10
FB1-7190-000	280 - 2	FB3-2956-000	300 - 19	FB5-4726-000	103 - 12
FB1-7214-000	103 - 2	FB3-2996-000	103 - 28	FB5-4727-000	103 - 13
FB1-7218-000	640 - 5	FB3-2997-000	360 - 1	FB5-4728-000	310 - 24
FB1-7219-000	640 - 6	FB3-3192-020	106 - 1	FB5-4731-000	100 - 10
FB1-7737-000	100 - 32	FB3-8320-000	130 - 12A	FB5-4731-000	100 - 15
FB1-7738-000	100 - 33	FB3-8320-000	922 - 2	FB5-4733-000	120 - 14
FB1-8130-000	640 - 7	FB4-2814-000	310 - 81	FB5-4735-000	300 - 4
FB1-8439-000	120 - 2	FB4-2817-000	310 - 14	FB5-4737-000	300 - 5
FB1-8581-000	120 - 3	FB4-2935-000	360 - 3	FB5-4738-000	300 - 5
FB1-8581-000	120 - 3	FB4-2943-000	104 - 3	FB5-4739-000	300 - 6
FB1-8584-000	120 - 22A	FB4-2944-000	104 - 4	FB5-4740-020	300 - 7
FB1-8619-000	315 - 1	FB4-2955-000	360 - 4	FB5-4741-030	100 - 11
FB1-8621-000	315 - 2	FB4-3057-000	640 - 11	FB5-4743-000	300 - 8
FB1-8625-000	315 - 3	FB4-3058-000	640 - 12	FB5-4745-000	315 - 9
FB2-3900-030	104 - 20	FB4-3061-000	102 - 7	FB5-4747-000	360 - 5
FB3-2206-000	104 - 1	FB4-3062-000	102 - 10	FB5-4748-000	360 - 6
FB3-2214-000	103 - 3	FB4-3063-000	102 - 11	FB5-4749-00U	360 - 7
FB3-2224-000	100 - 7	FB4-3064-000	102 - 12	FB5-4750-000	360 - 8
FB3-2381-000	100 - 46	FB4-3065-000	102 - 13	FB5-4754-000	360 - 9
FB3-2576-000	250 - 3	FB4-3066-000	102 - 14	FB5-4762-000	101 - 6
FB3-2596-000	107 - 14	FB4-3104-000	351 - 17	FB5-4766-000	120 - 15
FB3-2648-000	320 - 1	FB4-3170-000	120 - 11	FB5-4767-000	100 - 12
FB3-2649-000	320 - 2	FB4-3264-000	315 - 7	FB5-4768-000	100 - 16
FB3-2658-000	320 - 3	FB4-3265-000	315 - 8	FB5-4769-000	100 - 1
FB3-2672-000	640 - 8	FB4-3343-000	310 - 15	FB5-4772-000	100 - 13
FB3-2679-000	640 - 9	FB4-3355-000	640 - 13	FB5-4773-000	360 - 10
FB3-2712-000	640 - 10	FB4-5005-000	130 - 1	FB5-4776-000	310 - 71
FB3-2765-000	102 - 17	FB4-5349-000	310 - 18	FB5-4777-000	310 - 72
FB3-2812-000	120 - 4	FB4-5380-000	100 - 23	FB5-4778-000	310 - 80
FB3-2815-000	120 - 5	FB4-5382-020	104 - 21	FB5-4779-000	310 - 25
FB3-2821-000	120 - 7	FB4-5933-000	100 - 36	FB5-4780-000	310 - 26
FB3-2829-000	103 - 4	FB5-0281-000	102 - 4A	FB5-4782-000	330 - 1
FB3-2833-000	120 - 8	FB5-1471-000	101 - 5	FB5-4783-000	330 - 2
FB3-2834-000	120 - 9	FB5-2172-000	130 - 2	FB5-4785-000	330 - 3
FB3-2835-000	120 - 10	FB5-2173-000	130 - 3	FB5-4786-000	330 - 42

PARTS NUMBER	FIGURE & KEY NO.	PARTS NUMBER	FIGURE & KEY NO.	PARTS NUMBER	FIGURE & KEY NO
FB5-4787-000	330 - 4	FB5-4920-000	351 - 26	FB5-5143-000	100 - 37
FB5-4787-000	330 - 39	FB5-4923-000	810 - 1	FB5-5144-000	102 - 1
FB5-4788-000	330 - 5	FB5-4925-000	810 - 2	FB5-5145-000	120 - 16
FB5-4789-000	330 - 6	FB5-4926-000	810 - 3	FB5-5146-000	320 - 8
FB5-4790-000	330 - 7	FB5-4927-000	810 - 4	FB5-5148-000	810 - 12
FB5-4791-000	330 - 8	FB5-4928-000	810 - 5	FB5-5150-000	320 - 14
FB5-4793-000	330 - 9	FB5-4929-000	810 - 35	FB5-5150-000	350 - 5
FB5-4794-000	330 - 10	FB5-4930-000	810 - 32A	FB5-5155-000	102 - 2
FB5-4795-000	330 - 11	FB5-4931-000	810 - 32B	FB5-5159-000	105 - 1
FB5-4796-000	330 - 12	FB5-4932-000	810 - 32C	FB5-5160-000	104 - 6
FB5-4798-000	330 - 13	FB5-4934-000	810 - 6	FB5-5163-000	101 - 23
FB5-4799-000	330 - 20	FB5-4938-000	810 - 7	FB5-5173-000	105 - 2
FB5-4800-000	330 - 21	FB5-4940-000	810 - 8	FB5-5175-000	103 - 11
FB5-4801-000	330 - 22	FB5-4941-000	810 - 9	FB5-5182-000	100 - 5
FB5-4802-000	330 - 23	FB5-4942-000	810 - 10	FB5-5185-000	102 - 3
FB5-4804-000	330 - 26	FB5-4943-000	810 - 11	FB5-5186-030	100 - 6
FB5-4805-000	330 - 27	FB5-4944-000	810 - 37	FB5-5192-000	104 - 7
FB5-4808-000	330 - 28	FB5-4948-000	810 - 36	FB5-5193-000	110 - 1
FB5-4811-000	330 - 18A	FB5-4953-000	640 - 14	FB5-5193-000	111 - 3
FB5-4812-000	330 - 33A	FB5-4965-000	640 - 15	FB5-5194-000	120 - 17
FB5-4813-000	330 - 29	FB5-4966-000	640 - 16	FB5-5195-000	120 - 18
FB5-4814-000	330 - 18B	FB5-4968-000	640 - 17	FB5-5199-000	120 - 19
FB5-4815-000	104 -	FB5-4975-000	104 - 25	FB5-5257-000	191 - 1
FB5-4816-000	104 - 12	FB5-4976-000	104 - 16	FB5-5258-000	191 - 2
FB5-4817-000	104 - 13	FB5-4979-000	104 - 17	FB5-5260-000	351 - 20
FB5-4819-000	104 - 2	FB5-4986-000	500 - 1	FB5-5261-000	351 - 21
FB5-4820-000	105 - 8	FB5-5014-000	107 - 26	FB5-5264-000	107 - 4
FB5-4821-000	280 - 3	FB5-5019-000	500 - 2	FB5-5265-000	104 - 23
FB5-4826-000	107 - 15	FB5-5032-000	107 - 1	FB5-5266-020	100 - 8
FB5-4827-000	107 - 16	FB5-5036-000	250 - 4	FB5-5267-000	100 - 9
FB5-4828-000	107 - 17	FB5-5038-000	250 - 5	FB5-5269-000	500 - 3
FB5-4829-000	107 - 18	FB5-5039-000	250 - 6	FB5-5270-000	500 - 4
FB5-4832-000	330 - 14	FB5-5045-000	260 - 2	FB5-5273-000	500 - 5
FB5-4833-000	330 - 30	FB5-5046-000	260 - 3	FB5-5281-000	320 - 15
FB5-4834-000	330 - 31	FB5-5048-000	107 - 2	FB5-5282-000	320 - 16
FB5-4835-000	330 - 15	FB5-5052-000	100 - 24	FB5-5283-000	320 - 17
FB5-4839-000	102 - 4B	FB5-5053-000	100 - 18	FB5-5286-000	310 - 27
FB5-4839-000	104 - 5	FB5-5055-000	100 - 2	FB5-5287-000	310 - 28
FB5-4853-000	350 - 1	FB5-5057-000	100 - 30	FB5-5288-000	320 - 9
FB5-4854-000	350 - 2	FB5-5058-000	100 - 3	FB5-5289-000	103 - 14
FB5-4855-000	350 - 16	FB5-5059-000	106 - 2	FB5-6612-000	900 - 19
FB5-4856-000	350 - 19	FB5-5061-000	100 - 27	FB5-8353-000	300 - 20
FB5-4858-000	350 - 4	FB5-5063-000	100 - 4	FB5-9249-000	106 - 8
FB5-4859-000	100 - 38	FB5-5066-000	100 - 47	FB5-9250-000	300 - 31
FB5-4860-000	100 - 39	FB5-5067-000	100 - 19	FB5-9252-000	106 - 3
FB5-4911-000	351 - 2	FB5-5068-000	100 - 45	FB5-9567-000	104 - 24
FB5-4912-000	351 - 3	FB5-5069-000	100 - 20	FB5-9787-000	350 - 23
FB5-4914-000	351 - 18	FB5-5070-000	100 - 21	FB5-9789-000	103 - 34
FB5-4915-000	351 - 19	FB5-5076-000	130 - 6	FB5-9794-000	310 - 20
FB5-4916-000	351 - 24	FB5-5077-000	130 - 7	FB5-9795-000	310 - 22
FB5-4918-000	351 - 25	FB5-5098-000	107 - 3	FB5-9801-000	103 - 27
FB5-4919-000	351 - 4	FB5-5108-000	107 - 31	FB5-9802-000	310 - 17

NUMERICAL INDEX
iR2200i/2800i/3300i(Numerical Index)

PARTS NUMBER	FIGURE & KEY NO.	PARTS NUMBER	FIGURE & KEY NO.	PARTS NUMBER	FIGURE & KEY NO
FB5-9806-00U	100 - 34	FF3-4165-000	260 - 22	FF6-0160-000	500 - 7
FB5-9809-000	103 - 35	FF3-4172-000	190 - 1	FF6-0166-000	107 - 27
FB6-2767-000	351 - 11	FF3-4174-000	103 - 30	FF6-0186-000	260 - 5
FB6-2768-000	351 - 13	FF3-4175-000	310 - 31	FF6-0206-000	130 - 8
FB6-2769-000	351 - 14	FF3-4179-000	330 - 17	FF6-0243-000	106 - 16
FB6-2770-000	106 - 11	FF3-4188-000	640 - 19	FF6-0244-000	107 - 5
FB6-2776-000	310 - 1	FF3-4190-020	260 - 4	FF6-0245-000	105 - 7
FB6-2777-000	310 - 2	FF3-4192-000	110 - 2	FF6-0247-000	106 - 4
FB6-2778-000	310 - 3	FF3-4192-000	B6 - PLG1	FF6-0345-000	350 - 8
FB6-2779-000	310 - 4	FF3-4193-000	110 - 3	FG3-0133-000	107 - 20
FB6-2780-000	310 - 5	FF3-4193-000	B6 - PLG1	FG3-0133-000	B7 - 8
FB6-2781-000	310 - 6	FF3-4194-000	111 - 4	FG3-1592-000	460 - 1
FB6-2782-000	310 - 7	FF3-4199-000	900 - 1	FG3-1596-000	320 - 4
FB6-2783-000	310 - 8	FF3-4219-000	900 - 5	FG3-1597-000	360 - 18
FB6-2784-000	360 - 2	FF5-1458-020	104 - 19	FG3-1598-000	350 - 15
FB6-2785-000	120 - 12	FF5-4480-000	640 - 20	FG3-1599-000	351 - 16
FB6-2786-000	120 - 13	FF5-4481-000	640 - 21	FG3-1600-000	810 - 31
FB6-2787-020	310 - 16	FF5-4491-000	300 - 28	FG3-1602-000	102 - 9
FB6-2788-000	120 - 6	FF5-4524-020	310 - 34	FG3-1603-000	910 -
FB6-2789-020	310 - 19	FF5-4548-030	300 - 29	FG3-1603-000	B7 - 1
FB6-2790-000	310 - 21	FF5-4552-020	310 - 32	FG3-1604-000	910 -
FB6-2792-000	310 - 23	FF5-4569-020	300 - 21	FG3-1604-000	B7 - 1
FB6-2852-000	100 - 28	FF5-4634-020	310 - 33	FG3-1608-000	107 - 12
FB6-2860-000	810 - 22	FF5-7246-000	330 - 43	FG3-1608-000	B7 - 11
FB6-4433-000	100 - 42	FF6-0074-020	100 - 25	FG3-1615-000	191 - 7
FB6-4434-000	100 - 42	FF6-0086-000	103 - 5	FG3-1616-000	107 - 13
FB6-4435-000	100 - 42	FF6-0087-000	101 - 16	FG3-1617-000	101 - 14
FB6-4436-000	100 - 42	FF6-0092-00U	106 - 9	FG3-1617-000	B4 - S4
FB6-4577-000	310 - 75	FF6-0094-000	300 - 9	FG3-1618-000	101 - 15
FB6-5091-000	310 - 62	FF6-0096-000	101 - 18	FG3-1618-000	B4 - S5
FB6-5907-000	100 - 42	FF6-0097-000	103 - 6	FG3-1620-120	930 - 1
FB6-5908-000	100 - 42	FF6-0098-000	300 - 22	FG3-1624-000	107 - 21
FB6-5909-000	100 - 42	FF6-0099-000	300 - 22	FG3-1625-000	107 - 22
FB6-5910-000	100 - 42	FF6-0101-000	120 - 22	FG3-1626-000	107 - 23
FB6-5911-000	100 - 42	FF6-0102-00U	106 - 10	FG3-1744-020	107 - 25
FB6-5912-000	100 - 42	FF6-0104-000	330 - 40	FG3-1744-020	900 - 4
FB6-5913-000	100 - 42	FF6-0105-000	330 - 18	FG3-1744-020	B7 - 10
FB6-5914-000	100 - 42	FF6-0106-000	330 - 33	FG3-1795-000	921 -
FB6-5915-000	100 - 42	FF6-0107-000	102 - 4	FG3-1795-000	B7 - 9
FB6-5916-000	100 - 42	FF6-0108-000	310 - 73	FG3-1994-000	900 - 7
FB6-5918-000	100 - 42	FF6-0109-000	310 - 74	FG3-1995-00U	107 - 11
FB6-5927-000	100 - 42	FF6-0111-000	106 - 5	FG3-1998-020	930 -
FB6-6546-000	351 - 12	FF6-0112-000	101 - 9	FG3-1998-020	B7 - 4
FC7-2665-000	500 - 6	FF6-0132-000	350 - 3	FG3-1999-020	930 -
FE5-4046-000	330 - 32	FF6-0138-000	102 - 5	FG3-1999-020	B7 - 4
FE5-4132-000	120 - 21	FF6-0139-000	351 - 22	FG3-2228-000	900 - 18
FE5-4134-000	640 - 18	FF6-0141-000	280 - 4	FG3-2232-080	900 - 3
FF3-1136-000	104 - 18	FF6-0153-000	640 - 22	FG3-2232-080	B7 - 10
FF3-1171-000	101 - 10	FF6-0154-000	640 - 23	FG3-2238-000	900 - 9
FF3-1173-000	330 - 16	FF6-0155-000	640 - 24	FG3-2484-000	900 - 21
FF3-2974-000	310 - 29	FF6-0156-000	640 - 25	FG3-2492-000	900 - 3
FF3-2975-000	310 - 30	FF6-0157-000	640 - 26	FG3-2772-000	900 - 20

NUMERICAL INDEX
iR2200i/2800i/3300i(Numerical Index)

PARTS NUMBER	FIGURE & KEY NO.			PARTS NUMBER	FIGURE & KEY NO.			PARTS NUMBER	FIGURE & KEY NO		
FG3-2959-000	900	-	17	FG6-5782-000	B5	-	SW1	FH2-7082-000	111	-	7
FG3-2959-000	B7	-	16	FG6-5782-000	B5	-	SW2	FH2-7082-000	B6	-	PLG1
FG3-3057-000	900	-	22	FG6-5782-000	B7	-	3	FH2-7197-000	900	-	6
FG3-3057-000	900	-	22	FG6-5795-000	900	-	16	FH2-7197-000	B1	-	J1017
FG3-3360-000	922	-		FG6-5795-000	B7	-	15	FH2-7197-000	B1	-	J2005
FG5-6289-000	315	-	13	FG6-5814-050	191	-		FH3-2613-020	107	-	8
FG5-6289-000	B4	-	VR1	FG6-5815-000	107	-	30	FH3-2613-020	B7	-	2
FG5-6297-000	102	-	18	FG6-5831-000	900	-	10	FH3-2614-020	107	-	8
FG5-6297-000	B6	-	LAMP2	FG6-5831-000	B7	-	12	FH3-2614-020	B7	-	2
FG6-0455-000	940	-		FG6-6038-200	810	-		FH3-2615-000	107	-	9
FG6-0455-000	B7	-	5	FG6-6039-120	810	-	34	FH3-2615-000	B7	-	7
FG6-0561-000	102	-	6	FG6-6039-120	B6	-	H1	FH3-2616-020	107	-	9
FG6-5633-000	460	-		FG6-6039-120	B6	-	H2	FH3-2616-020	B7	-	7
FG6-5633-000	B2	-	M10	FG6-6039-120	B6	-	TH1	FH4-6002-000	940	-	IC1601
FG6-5633-000	B4	-	BD	FG6-6039-120	B6	-	TH2	FH4-6085-020	900	-	IC1009
FG6-5633-000	B7	-	6	FG6-6039-120	B6	-	TP1	FH4-6141-000	930	-	IC334
FG6-5638-000	190	-		FG6-6040-200	810	-		FH4-6145-010	900	-	IC1005
FG6-5644-130	103	-	23	FG6-6041-120	810	-	34	FH4-6208-050	950	-	IC3
FG6-5648-000	120	-		FG6-6041-120	B6	-	H1	FH4-6257-000	950	-	IC8
FG6-5649-000	315	-		FG6-6041-120	B6	-	H2	FH4-6258-000	950	-	IC4
FG6-5650-000	360	-		FG6-6041-120	B6	-	TH1	FH4-6273-000	900	-	IC1010
FG6-5651-000	261	-		FG6-6041-120	B6	-	TH2	FH4-6300-000	900	-	IC1003
FG6-5670-000	330	-		FG6-6041-120	B6	-	TP1	FH4-6300-000	930	-	IC309
FG6-5691-000	350	-		FG6-6069-000	950	-		FH5-3378-000	900	-	20
FG6-5698-000	351	-		FG6-6069-000	B7	-	14	FH5-3379-000	900	-	20
FG6-5702-190	810	-		FG6-7021-000	130	-	12	FH5-3380-000	900	-	23
FG6-5703-000	280	-		FG6-7021-000	B7	-	9	FH5-3387-000	900	-	21
FG6-5709-000	810	-	32	FG6-7022-000	130	-	13	FH6-0784-000	130	-	10
FG6-5710-000	810	-	33	FG6-7068-000	130	-	14	FH6-1477-000	310	-	35
FG6-5710-000	B4	-	PS26	FG6-7069-000	130	-	15	FH6-1477-000	B2	-	M2
FG6-5712-120	810	-	34	FG6-7070-000	130	-	16	FH6-1846-000	250	-	1
FG6-5712-120	B6	-	H1	FG6-7071-000	130	-	17	FH6-1846-000	B2	-	M1
FG6-5712-120	B6	-	H2	FG6-7738-000	920	-		FH6-1848-000	280	-	5
FG6-5712-120	B6	-	TH1	FG6-7738-000	B7	-	9	FH6-1848-000	B2	-	M4
FG6-5712-120	B6	-	TH2	FG6-9149-000	130	-	18	FH6-1849-000	260	-	6
FG6-5712-120	B6	-	TP1	FG8-1199-000	310	-	83	FH6-1849-000	B2	-	M9
FG6-5726-000	260	-		FG9-3913-000	640	-	44	FH6-1850-000	350	-	10
FG6-5727-040	250	-		FG9-3917-000	640	-		FH6-1850-000	B2	-	M5
FG6-5736-000	100	-	17	FG9-3987-000	280	-	11	FH6-1851-000	261	-	1
FG6-5753-000	130	-		FH2-5006-000	110	-	6	FH6-1851-000	B2	-	M6
FG6-5754-000	130	-		FH2-5824-000	100	-	48	FH6-1852-000	190	-	2
FG6-5755-000	130	-		FH2-5825-000	B1	-	J2	FH6-1852-000	191	-	3
FG6-5756-000	130	-		FH2-6552-000	107	-	6	FH6-1852-000	B3	-	FM1
FG6-5777-000	110	-		FH2-6552-000	107	-	7	FH6-1852-000	B3	-	FM2
FG6-5777-000	B5	-	SW1	FH2-6842-020	130	-	9	FH6-1854-000	351	-	5
FG6-5777-000	B5	-	SW2	FH2-6842-020	B1	-	J9801	FH6-1854-000	B3	-	FM4
FG6-5777-000	B7	-	3	FH2-6842-020	B1	-	J9802	FH6-1854-000	B3	-	FM5
FG6-5781-000	110	-		FH2-6855-000	B1	-	J2	FH6-5005-020	310	-	36
FG6-5781-000	B5	-	SW1	FH2-7080-000	111	-	1	FH6-5005-020	B5	-	CL1
FG6-5781-000	B5	-	SW2	FH2-7080-000	B6	-	PLG1	FH6-5006-000	260	-	7
FG6-5781-000	B7	-	3	FH2-7081-000	111	-	2	FH6-5006-000	B5	-	CL2
FG6-5782-000	111	-		FH2-7081-000	B6	-	PLG1	FH6-5007-000	250	-	7

NUMERICAL INDEX
iR2200i/2800i/3300i(Numerical Index)

PARTS NUMBER	FIGURE & KEY NO.	PARTS NUMBER	FIGURE & KEY NO.	PARTS NUMBER	FIGURE & KEY NO
FH6-5007-000	B5 - CL3	FM1-0196-000	900 - 15	FS5-9397-000	101 - 11
FH6-5020-000	310 - 37	FM1-0196-000	B7 - 13	FS5-9661-000	100 - 29
FH6-5020-000	B5 - SL1	FM5-5153-000	107 - 29	FS5-9663-000	105 - 4
FH6-5048-000	191 - 4	FM5-5153-000	B4 - S2	FS5-9664-000	360 - 11
FH6-5048-000	B5 - SL6	FS1-1189-000	104 - 8	FS6-0552-000	640 - 31
FH6-5051-000	260 - 8	FS1-1189-000	104 - 14	FS6-0564-000	310 - 45
FH6-5051-000	B5 - SL5	FS1-1202-000	350 - 20	FS6-0565-000	310 - 46
FH7-4576-000	106 - 14	FS1-1202-000	351 - 6	FS6-0572-000	103 - 20
FH7-4576-000	B6 - H3	FS1-1594-000	640 - 28	FS6-0579-000	640 - 32
FH7-7422-000	640 - 27	FS1-9005-020	280 - 6	FS6-0592-000	640 - 33
FH7-7422-000	B4 - S1	FS1-9010-020	310 - 49	FS6-2311-000	101 - 12
FH7-7557-020	330 - 24	FS2-1431-000	104 - 9	FS6-2326-000	310 - 82
FH7-7557-020	350 - 11	FS2-2783-000	103 - 7	FS6-2327-000	310 - 78
FH7-7557-020	B4 - PS12	FS2-2783-000	330 - 34	FS6-2328-020	310 - 51
FH7-7557-020	B4 - PS15	FS5-1212-000	640 - 29	FS6-2330-000	310 - 52
FH7-7557-020	B4 - PS16	FS5-1261-000	103 - 8	FS6-2331-000	310 - 53
FH7-7559-000	190 - 3	FS5-1589-000	103 - 15	FS6-2337-000	120 - 26
FH7-7559-000	B4 - S3	FS5-1589-000	310 - 39	FS6-2784-000	102 - 15
FH7-7625-030	111 - 5	FS5-1597-000	310 - 77	FS6-2790-000	120 - 27
FH7-7625-030	B6 - CB1	FS5-1598-000	120 - 23	FS6-2791-000	120 - 28
FH7-7626-000	110 - 4	FS5-1943-000	260 - 9	FS6-2900-000	310 - 54
FH7-7626-000	B6 - CB1	FS5-1943-000	350 - 6	FS6-8116-000	300 - 21A
FH9-0585-000	940 - Q1604	FS5-1943-000	350 - 12	FS6-8992-000	102 - 22
FH9-0585-000	940 - Q1605	FS5-1943-000	351 - 7	FS7-0103-000	310 - 55
FH9-0585-000	940 - Q1606	FS5-1944-000	103 - 9	FS7-0104-000	310 - 56
FH9-0585-000	940 - Q1607	FS5-1944-000	330 - 35	FS7-0701-000	351 - 8
FH9-0585-000	940 - Q1608	FS5-1945-000	810 - 32D	FS7-0702-000	280 - 8
FH9-0585-000	940 - Q1609	FS5-1946-000	310 - 40	FS7-0703-000	280 - 9
FH9-0585-000	B4 - PS1	FS5-1948-000	310 - 41	FS7-0704-000	280 - 10
FH9-0585-000	B4 - PS2	FS5-1949-000	320 - 12	FS7-0707-000	106 - 13
FH9-0585-000	B4 - PS3	FS5-1950-000	120 - 24	FS7-0708-000	810 - 14
FH9-0585-000	B4 - PS4	FS5-1953-000	106 - 12	FS7-0709-000	810 - 15
FH9-0585-000	B4 - PS5	FS5-2312-000	250 - 8	FS7-0717-000	640 - 34
FH9-0585-000	B4 - PS6	FS5-2331-000	280 - 7	FS7-0718-000	640 - 35
FK2-0144-000	103 - 31	FS5-2650-000	300 - 30	FS7-0719-000	640 - 36
FK2-0144-000	B2 - M3	FS5-3177-000	315 - 10	FS7-0720-000	640 - 37
FK2-0149-000	103 - 32	FS5-3620-000	310 - 42	FS7-0721-000	640 - 38
FK2-0149-000	310 - 38	FS5-3815-000	250 - 9	FS7-0722-000	360 - 13
FK2-0149-000	320 - 11	FS5-3820-000	330 - 45	FS7-0723-000	360 - 14
FK2-0149-000	360 - 12	FS5-3821-000	103 - 16	FS7-0725-000	260 - 12
FK2-0149-000	810 - 13	FS5-3822-000	103 - 17	FS7-0726-000	260 - 13
FK2-0149-000	B4 - PS7	FS5-3823-000	103 - 18	FS7-0727-000	260 - 14
FK2-0149-000	B4 - PS8	FS5-3824-000	260 - 11	FS7-0728-000	260 - 15
FK2-0149-000	B4 - PS9	FS5-3830-000	310 - 43	FS7-0729-000	260 - 16
FK2-0149-000	B4 - PS10	FS5-3831-000	103 - 19	FS7-0730-000	260 - 17
FK2-0149-000	B4 - PS11	FS5-3833-000	310 - 44	FS7-0731-000	260 - 18
FK2-0149-000	B4 - PS13	FS5-6448-000	640 - 30	FS7-0737-000	260 - 19
FK2-0149-000	B4 - PS17	FS5-8612-000	315 - 14	FS7-0738-000	103 - 10
FK2-0149-000	B4 - PS18	FS5-8613-000	315 - 14	FS7-0739-000	330 - 36
FK2-0149-000	B4 - PS22	FS5-8614-000	315 - 14	FS7-0740-000	330 - 37
FK2-0149-000	B4 - PS23	FS5-8615-000	315 - 14	FS7-0744-000	350 - 21
FK2-0244-000	921 - Q6822	FS5-9210-020	104 - 10	FS7-0745-000	350 - 17

NUMERICAL INDEX
iR2200i/2800i/3300i(Numerical Index)

PARTS NUMBER	FIGURE & KEY NO.	PARTS NUMBER	FIGURE & KEY NO.	PARTS NUMBER	FIGURE & KEY NO
FS7-0746-000	350 - 13	NPN	300 -	NPN	B1 - J6803
FS7-0747-000	350 - 14	NPN	310 -	NPN	B1 - J9801
FS7-0750-00U	103 - 33	NPN	320 -	NPN	B1 - J16030
FS7-0752-000	310 - 58	NPN	500 -	NPN	B1 - J16070
FS7-0753-000	260 - 20	NPN	900 -	NPN	B1 - J16080
FS7-0754-000	640 - 39	NPN	B1 -	NPN	B2 -
FS7-0755-000	640 - 40	NPN	B1 - J2	NPN	B3 -
FS7-0756-000	310 - 48	NPN	B1 - J3	NPN	B4 -
FS7-0757-000	310 - 57	NPN	B1 - J1028	NPN	B5 -
FS7-0758-000	310 - 47	NPN	B1 - J1602	NPN	B6 -
FS7-0760-000	103 - 21	NPN	B1 - J1604	NPN	B7 -
FS7-0761-000	120 - 25	NPN	B1 - J2001	PCB	B1 - J1
FS7-2287-000	101 - 7	NPN	B1 - J2005	PCB	B1 - J2
FS7-2288-000	101 - 17	NPN	B1 - J3020	PCB	B1 - J2
FS7-2288-000	101 - 19	NPN	B1 - J3024	PCB	B1 - J3
FS7-2372-000	351 - 9	NPN	B1 - J3026	PCB	B1 - J4
FS7-2373-000	810 - 16	NPN	B1 - J3028	PCB	B1 - J5
FS7-2374-000	810 - 17	NPN	B1 - J3029	PCB	B1 - J5
FS7-2375-000	810 - 18	NPN	B1 - J3041	PCB	B1 - J6
FS7-2380-000	105 - 3	NPN	B1 - J3043	PCB	B1 - J6
FS7-2382-000	330 - 19	NPN	B1 - J3044	PCB	B1 - J7
FS7-2382-000	330 - 41	NPN	B1 - J3045	PCB	B1 - J8
FS7-2383-000	330 - 38	NPN	B1 - J3046	PCB	B1 - J11
FS7-2385-000	107 - 10	NPN	B1 - J3047	PCB	B1 - J11
FS7-2386-000	104 - 11	NPN	B1 - J3081	PCB	B1 - J20
FS7-2387-000	104 - 22	NPN	B1 - J3082	PCB	B1 - J100
FS7-2390-000	350 - 7	NPN	B1 - J3083	PCB	B1 - J100
FS7-2398-000	351 - 23	NPN	B1 - J3084	PCB	B1 - J110
FS7-2400-000	300 - 10	NPN	B1 - J3086	PCB	B1 - J111
FS7-2404-000	100 - 14	NPN	B1 - J3088	PCB	B1 - J120
FS7-2405-000	640 - 41	NPN	B1 - J3090	PCB	B1 - J121
FS7-2406-000	120 - 29	NPN	B1 - J3112	PCB	B1 - J122
FS7-2408-000	310 - 59	NPN	B1 - J3113	PCB	B1 - J124
FS7-2409-000	310 - 60	NPN	B1 - J3115	PCB	B1 - J126
FS7-2410-000	105 - 5	NPN	B1 - J3118	PCB	B1 - J127
FS7-2411-000	102 - 16	NPN	B1 - J3119	PCB	B1 - J130
FS7-2413-000	310 - 11	NPN	B1 - J3120	PCB	B1 - J131
FS7-2414-000	310 - 50	NPN	B1 - J3121	PCB	B1 - J135
FS7-2417-000	310 - 79	NPN	B1 - J3123	PCB	B1 - J136
FS7-8071-000	300 - 32	NPN	B1 - J3124	PCB	B1 - J200
FS7-8072-000	300 - 33	NPN	B1 - J3125	PCB	B1 - J201
FS7-8075-000	900 - 14	NPN	B1 - J3126	PCB	B1 - J202
FS7-8267-000	810 - 32E	NPN	B1 - J3128	PCB	B1 - J203
FU5-1615-000	260 - 10	NPN	B1 - J3129	PCB	B1 - J204
NPN	100 -	NPN	B1 - J3141	PCB	B1 - J205
NPN	101 -	NPN	B1 - J3142	PCB	B1 - J208
NPN	102 -	NPN	B1 - J3143	PCB	B1 - J300
NPN	103 -	NPN	B1 - J3144	PCB	B1 - J301
NPN	104 -	NPN	B1 - J3146	PCB	B1 - J302
NPN	105 -	NPN	B1 - J3147	PCB	B1 - J304
NPN	106 -	NPN	B1 - J3201	PCB	B1 - J307
NPN	107 -	NPN	B1 - J3202	PCB	B1 - J308

NUMERICAL INDEX
iR2200i/2800i/3300i(Numerical Index)

PARTS NUMBER	FIGURE & KEY NO.	PARTS NUMBER	FIGURE & KEY NO.	PARTS NUMBER	FIGURE & KEY NO
PCB	B1 - J309	PCB	B1 - J6803	VD7-0602-501	930 - FU302
PCB	B1 - J310	PCB	B1 - J6804	VD7-0641-001	111 - 6
PCB	B1 - J311	PCB	B1 - J6805	VD7-0641-601	910 - FU1
PCB	B1 - J312	PCB	B1 - J6806	VD7-0792-501	940 - FU1601
PCB	B1 - J313	PCB	B1 - J6807	VS1-5452-004	B1 - J3029
PCB	B1 - J314	PCB	B1 - J6808	VS1-5729-002	B1 - J3053
PCB	B1 - J315	PCB	B1 - J7040	VS1-5729-004	B1 - J3172
PCB	B1 - J316	PCB	B1 - J7050	VS1-5729-004	B1 - J4101
PCB	B1 - J316	PCB	B1 - J9201	VS1-5824-002	B1 - J21
PCB	B1 - J320	PCB	B1 - J9202	VS1-5824-002	B1 - J3052
PCB	B1 - J332	PCB	B1 - J9203	VS1-5824-002	B1 - J3202
PCB	B1 - J500	PCB	B1 - J9802	VS1-5824-003	B1 - J3021
PCB	B1 - J501	RA9-1124-000	351 - 10	VS1-5824-003	B1 - J3042
PCB	B1 - J701	RB1-6539-000	310 - 61	VS1-5824-003	B1 - J3043
PCB	B1 - J702	RB1-6592-000	310 - 63	VS1-6302-002	B1 - J127
PCB	B1 - J707	RB1-7067-000	900 - 2	VS1-6302-002	B1 - J332
PCB	B1 - J708	RB2-1920-000	810 - 19	VS1-6302-002	B1 - J716
PCB	B1 - J712	RB2-1929-000	810 - 20	VS1-6302-002	B1 - J1027
PCB	B1 - J713	RB2-1930-000	810 - 21	VS1-6302-003	B1 - J717
PCB	B1 - J716	RB2-1947-000	810 - 23	VS1-6302-004	B1 - J122
PCB	B1 - J717	RB2-4389-000	810 - 24	VS1-6302-004	B1 - J320
PCB	B1 - J1011	RH2-5281-000	B1 - J3201	VS1-6302-004	B1 - J1058
PCB	B1 - J1011	RH2-5317-000	B1 - J3201	VS1-6302-004	B1 - J3200
PCB	B1 - J1015	RH5-3058-000	810 - 25	VS1-6302-006	B1 - J309
PCB	B1 - J1017	RS1-1087-000	810 - 26	VS1-6302-006	B1 - J3090
PCB	B1 - J1018	RS5-1446-000	810 - 27	VS1-6302-009	B1 - J126
PCB	B1 - J1019	RS5-2489-000	351 - 15	VS1-6302-010	B1 - J124
PCB	B1 - J1020	RS6-0354-000	810 - 28	VS1-6302-010	B1 - J900
PCB	B1 - J1021	RS6-2192-000	810 - 32F	VS1-6302-015	B1 - J121
PCB	B1 - J1022	RS6-8382-000	100 - 41	VS1-6302-015	B1 - J1020
PCB	B1 - J1023	RS6-8382-000	100 - 44	VS1-6313-004	B1 - J500
PCB	B1 - J1024	RS6-8382-000	460 - 4	VS1-6313-005	B1 - J501
PCB	B1 - J1027	SYS	B1 - J2	VS1-6313-009	B1 - J311
PCB	B1 - J1028	SYS	B1 - J4	VS1-6313-010	B1 - J308
PCB	B1 - J1050	SYS	B1 - J47	VS1-6313-010	B1 - J314
PCB	B1 - J1058	SYS	B1 - J900	VS1-6313-011	B1 - J315
PCB	B1 - J1059	SYS	B1 - J2002	VS1-6313-012	B1 - J304
PCB	B1 - J1060	SYS	B1 - J2060	VS1-6313-012	B1 - J313
PCB	B1 - J1061	SYS	B1 - J3130	VS1-6313-012	B1 - J3040
PCB	B1 - J1101	SYS	B1 - J3172	VS1-6313-013	B1 - J301
PCB	B1 - J1102	SYS	B1 - J3900	VS1-6313-013	B1 - J1019
PCB	B1 - J1103	SYS	B1 - J7040	VS1-6313-013	B1 - J1050
PCB	B1 - J1104	SYS	B1 - J7050	VS1-6313-015	B1 - J312
PCB	B1 - J1601	SYS	B1 - J7100	VS1-6313-018	B1 - J302
PCB	B1 - J1602	SYS	B1 - J9020	VS1-6313-018	B1 - J1018
PCB	B1 - J1603	SYS	B1 - J9202	VS1-6313-018	B1 - J6801
PCB	B1 - J1604	VD7-0211-001	110 - 5	VS1-6314-003	B1 - J110
PCB	B1 - J1607	VD7-0213-151	910 - FU1	VS1-6314-003	B1 - J201
PCB	B1 - J1608	VD7-0602-001	930 - FU300	VS1-6314-003	B1 - J701
PCB	B1 - J2060	VD7-0602-001	930 - FU301	VS1-6314-003	B1 - J1021
PCB	B1 - J3110	VD7-0602-001	930 - FU303	VS1-6314-003	B1 - J3028
PCB	B1 - J6801	VD7-0602-001	930 - FU304	VS1-6314-003	B1 - J16030

NUMERICAL INDEX
iR2200i/2800i/3300i(Numerical Index)

PARTS NUMBER	FIGURE & KEY NO.			PARTS NUMBER	FIGURE & KEY NO.			PARTS NUMBER	FIGURE & KEY NO		
VS1-6314-003	B1	-	J16070	VS1-6321-003	B1	-	J1607	VS1-7177-002	250	-	10
VS1-6314-004	B1	-	J307	VS1-6321-003	B1	-	J1608	VS1-7177-002	260	-	21
VS1-6314-004	B1	-	J712	VS1-6321-003	B1	-	J3020	VS1-7177-002	460	-	2
VS1-6314-004	B1	-	J1059	VS1-6321-003	B1	-	J3021	VS1-7177-002	810	-	31A
VS1-6314-004	B1	-	J1061	VS1-6321-003	B1	-	J3024	VS1-7177-002	B1	-	J21
VS1-6314-004	B1	-	J9203	VS1-6321-003	B1	-	J3042	VS1-7177-002	B1	-	J3023
VS1-6314-005	B1	-	J4	VS1-6321-003	B1	-	J3044	VS1-7177-002	B1	-	J3052
VS1-6314-005	B1	-	J310	VS1-6321-003	B1	-	J3045	VS1-7177-002	B1	-	J3081
VS1-6314-005	B1	-	J3128	VS1-6321-003	B1	-	J3084	VS1-7177-002	B1	-	J3082
VS1-6314-006	B1	-	J111	VS1-6321-003	B1	-	J3112	VS1-7177-002	B1	-	J3083
VS1-6314-006	B1	-	J1104	VS1-6321-003	B1	-	J3113	VS1-7177-002	B1	-	J3125
VS1-6314-006	B1	-	J6807	VS1-6321-003	B1	-	J3118	VS1-7177-002	B1	-	J3202
VS1-6314-008	B1	-	J1103	VS1-6321-003	B1	-	J3119	VS1-7177-002	B1	-	J9021
VS1-6314-008	B1	-	J6808	VS1-6321-003	B1	-	J3122	VS1-7177-003	104	-	18A
VS1-6314-009	B1	-	J311	VS1-6321-003	B1	-	J3123	VS1-7177-003	190	-	4
VS1-6314-010	B1	-	J308	VS1-6321-003	B1	-	J3127	VS1-7177-003	191	-	6
VS1-6314-010	B1	-	J314	VS1-6321-003	B1	-	J3142	VS1-7177-003	315	-	11
VS1-6314-010	B1	-	J1024	VS1-6321-003	B1	-	J3146	VS1-7177-003	320	-	4A
VS1-6314-010	B1	-	J1102	VS1-6321-003	B1	-	J3147	VS1-7177-003	330	-	44
VS1-6314-010	B1	-	J6805	VS1-6321-003	B1	-	J16080	VS1-7177-003	351	-	16A
VS1-6314-011	B1	-	J20	VS1-6321-004	B1	-	J707	VS1-7177-003	460	-	3
VS1-6314-011	B1	-	J315	VS1-6321-004	B1	-	J1603	VS1-7177-003	B1	-	J3020
VS1-6314-011	B1	-	J1023	VS1-6321-004	B1	-	J3025	VS1-7177-003	B1	-	J3021
VS1-6314-011	B1	-	J1101	VS1-6321-004	B1	-	J3086	VS1-7177-003	B1	-	J3024
VS1-6314-011	B1	-	J6806	VS1-6321-004	B1	-	J3115	VS1-7177-003	B1	-	J3042
VS1-6314-012	B1	-	J304	VS1-6321-004	B1	-	J3129	VS1-7177-003	B1	-	J3084
VS1-6314-012	B1	-	J313	VS1-6321-004	B1	-	J3141	VS1-7177-003	B1	-	J3118
VS1-6314-012	B1	-	J3040	VS1-6321-004	B1	-	J3144	VS1-7177-003	B1	-	J3119
VS1-6314-013	B1	-	J301	VS1-6321-004	B1	-	J3151	VS1-7177-003	B1	-	J3122
VS1-6314-013	B1	-	J1019	VS1-6321-005	B1	-	J3124	VS1-7177-003	B1	-	J3127
VS1-6314-013	B1	-	J1050	VS1-6321-006	B1	-	J1022	VS1-7177-004	107	-	28
VS1-6314-015	B1	-	J312	VS1-6321-006	B1	-	J3041	VS1-7177-004	190	-	1A
VS1-6314-018	B1	-	J302	VS1-6321-006	B1	-	J3111	VS1-7177-004	261	-	2
VS1-6314-018	B1	-	J1018	VS1-6321-006	B1	-	J3117	VS1-7177-004	350	-	15A
VS1-6314-018	B1	-	J1601	VS1-6321-006	B1	-	J3121	VS1-7177-004	B1	-	J3025
VS1-6314-018	B1	-	J6801	VS1-6321-006	B1	-	J3145	VS1-7177-004	B1	-	J3115
VS1-6319-024	320	-	4C	VS1-6321-007	B1	-	J208	VS1-7177-004	B1	-	J3141
VS1-6319-024	B1	-	J3040	VS1-6321-007	B1	-	J708	VS1-7177-004	B1	-	J3144
VS1-6320-003	B1	-	J3046	VS1-6321-007	B1	-	J3120	VS1-7177-004	B1	-	J3151
VS1-6320-003	B1	-	J3047	VS1-6321-008	B1	-	J47	VS1-7177-007	101	-	22
VS1-6320-003	B1	-	J3143	VS1-6321-008	B1	-	J205	VS1-7177-007	B1	-	J3120
VS1-6320-012	B1	-	J136	VS1-6321-010	B1	-	J3140	VS1-7177-010	B1	-	J3140
VS1-6321-002	B1	-	J21	VS1-6321-012	B1	-	J136	VS1-7177-012	B1	-	J3130
VS1-6321-002	B1	-	J3023	VS1-6321-012	B1	-	J3130	VS1-7177-013	B1	-	J3900
VS1-6321-002	B1	-	J3052	VS1-6321-013	B1	-	J3900	VS1-7178-002	B1	-	J1
VS1-6321-002	B1	-	J3081	VS1-6407-080	B1	-	J1015	VS1-7178-003	B1	-	J3026
VS1-6321-002	B1	-	J3082	VS1-6407-080	B1	-	J9201	VS1-7178-003	B1	-	J6804
VS1-6321-002	B1	-	J3083	VS1-6534-002	B1	-	J7100	VS1-7178-004	B1	-	J1060
VS1-6321-002	B1	-	J3110	VS1-6702-004	B1	-	J3200	VS1-7178-004	B1	-	J3025
VS1-6321-002	B1	-	J3125	VS1-7177-002	102	-	21	VS1-7440-006	101	-	21
VS1-6321-002	B1	-	J9020	VS1-7177-002	107	-	19	VS1-7440-006	320	-	4B
VS1-6321-002	B1	-	J9021	VS1-7177-002	191	-	5	VS1-7440-006	360	-	18A

NUMERICAL INDEX
iR2200i/2800i/3300i(Numerical Index)

PARTS NUMBER	FIGURE & KEY NO.	PARTS NUMBER	FIGURE & KEY NO.	PARTS NUMBER	FIGURE & KEY NO
VS1-7440-006	B1 - J3041	WE8-5857-000	351 - 16C	WS3-5569-000	B1 - J3200
VS1-7440-006	B1 - J3111	WE8-5925-000	900 - 8	WS3-5595-000	B1 - J3022
VS1-7440-006	B1 - J3117	WG1-5301-000	922 - 4	WS3-5658-000	B1 - J7100
VS1-7440-006	B1 - J3121	WG1-5525-000	922 - 5	WS3-5720-000	B1 - J3200
VS1-7440-006	B1 - J3145	WK1-5147-000	930 - 2	WS4-0217-000	B1 - J2000
VS3-0247-004	B1 - J3022	WK1-5148-000	900 - 13	WS4-0217-000	B1 - J2001
VS3-0248-004	B1 - J3022	WM2-5235-000	107 - 24	WS4-0219-000	B1 - J2
VS3-5083-002	B1 - J135	WS3-5160-000	B1 - J120	WS4-0219-000	B1 - J4
VS3-5083-002	B1 - J713	WS3-5160-000	B1 - J130	WS4-0219-000	B1 - J2002
VS3-5083-002	B1 - J3053	WS3-5160-000	B1 - J131	WT2-5041-000	106 - 15
VS3-5083-003	B1 - J200	WS3-5160-000	B1 - J135	WT2-5565-000	103 - 30A
VS3-5083-003	B1 - J3088	WS3-5160-000	B1 - J200	WT2-5565-000	320 - 4D
VS3-5083-003	B1 - J3126	WS3-5160-000	B1 - J202	WT2-5565-000	320 - 13
VS3-5083-004	B1 - J120	WS3-5160-000	B1 - J203	WT2-5565-000	351 - 16B
VS3-5083-004	B1 - J702	WS3-5160-000	B1 - J204	WT2-5565-000	360 - 18B
VS3-5083-004	B1 - J4101	WS3-5160-000	B1 - J300	X71-9310-000	640 - 42
VS3-5083-005	B1 - J131	WS3-5160-000	B1 - J702	XA9-0134-000	810 - 29
VS3-5083-006	B1 - J202	WS3-5160-000	B1 - J713	XA9-0266-000	100 - 43
VS3-5083-007	B1 - J130	WS3-5160-000	B1 - J3053	XA9-0591-000	103 - 22
VS3-5083-007	B1 - J203	WS3-5160-000	B1 - J3088	XA9-0591-000	130 - 11
VS3-5083-008	B1 - J300	WS3-5160-000	B1 - J3126	XA9-0591-000	300 - 11
VS3-5083-010	B1 - J204	WS3-5160-000	B1 - J4101	XA9-0591-000	310 - 65
VS3-5116-006	B1 - J7	WS3-5174-000	B1 - J7	XA9-0605-000	100 - 22
VS3-5121-003	B1 - J2003	WS3-5174-000	B1 - J8	XA9-0605-000	100 - 40
VS3-5122-003	B1 - J2003	WS3-5291-000	B1 - J2003	XA9-0605-000	120 - 33
VS4-0001-002	B1 - J4	WS3-5292-000	B1 - J2003	XA9-0605-000	350 - 9
VS4-0001-002	B1 - J2002	WS3-5301-000	B1 - J3053	XA9-0605-000	351 - 27
VS4-0001-004	B1 - J2	WS3-5301-000	B1 - J3172	XA9-0606-000	315 - 15
VS4-0002-002	B1 - J2000	WS3-5301-000	B1 - J4101	XA9-0626-000	101 - 3
VS4-0002-002	B1 - J2001	WS3-5358-000	B1 - J21	XA9-0626-000	101 - 13
VT2-5161-018	B1 - J311	WS3-5358-000	B1 - J3021	XA9-0700-000	104 - 15
VT2-5161-020	B1 - J308	WS3-5358-000	B1 - J3042	XA9-0702-000	810 - 30
VT2-5161-020	B1 - J314	WS3-5358-000	B1 - J3043	XA9-0714-000	640 - 43
VT2-5161-022	B1 - J315	WS3-5358-000	B1 - J3052	XA9-0721-010	101 - 1
VT2-5161-024	B1 - J304	WS3-5358-000	B1 - J3202	XA9-0721-010	106 - 6
VT2-5161-024	B1 - J313	WS3-5399-000	B1 - J8	XA9-1289-000	105 - 6
VT2-5161-024	B1 - J3040	WS3-5403-000	B1 - J3022	XA9-1301-000	100 - 35
VT2-5161-026	B1 - J301	WS3-5569-000	B1 - J121	XB1-2300-407	107 - 504
VT2-5161-026	B1 - J1019	WS3-5569-000	B1 - J122	XB1-2300-409	104 - 506
VT2-5161-026	B1 - J1050	WS3-5569-000	B1 - J124	XB1-2300-409	106 - 503
VT2-5161-030	B1 - J312	WS3-5569-000	B1 - J126	XB1-2300-409	191 - 501
VT2-5161-036	B1 - J302	WS3-5569-000	B1 - J127	XB1-2300-409	300 - 503
VT2-5161-036	B1 - J1018	WS3-5569-000	B1 - J309	XB1-2300-409	310 - 501
VT2-5161-036	B1 - J6801	WS3-5569-000	B1 - J320	XB1-2300-409	330 - 507
VT2-5162-024	B1 - J136	WS3-5569-000	B1 - J332	XB1-2300-409	640 - 501
WA4-7181-000	930 - IC315	WS3-5569-000	B1 - J716	XB1-2300-607	107 - 501
WA4-7264-000	930 - IC316	WS3-5569-000	B1 - J717	XB1-2300-607	107 - 507
WA7-2437-020	900 - 11	WS3-5569-000	B1 - J900	XB1-2300-607	130 - 501
WA7-3406-000	900 - 12	WS3-5569-000	B1 - J1020	XB1-2300-607	900 - 501
WA7-3407-000	900 - 12	WS3-5569-000	B1 - J1027	XB1-2300-607	900 - 503
WC8-5178-000	102 - 8	WS3-5569-000	B1 - J1058	XB1-2300-609	102 - 502
WC8-5178-000	B5 - SW3	WS3-5569-000	B1 - J3090	XB1-2300-609	103 - 508

XB1-2300-609	107	-	508
XB1-2300-609	110	-	501
XB1-2300-609	260	-	501

PARTS NUMBER	FIGURE & KEY NO.			PARTS NUMBER	FIGURE & KEY NO.			PARTS NUMBER	FIGURE & KEY NO		
XB1-2300-609	300	-	501	XB4-7300-809	190	-	501	XD3-1200-122	310	-	505
XB1-2300-609	300	-	504	XB4-7300-809	300	-	505	XD3-1300-102	191	-	503
XB1-2300-805	350	-	501	XB4-7300-809	640	-	503	XD3-2160-102	330	-	511
XB1-2300-805	350	-	503	XB4-7301-609	640	-	504	XD3-2160-162	120	-	502
XB1-2300-805	640	-	502	XB4-7400-807	900	-	502	XD3-2200-122	106	-	504
XB1-2301-009	101	-	503	XB4-7400-809	100	-	506	XD3-2200-142	260	-	505
XB1-2400-409	106	-	506	XB4-7400-809	330	-	505	XD9-0103-000	360	-	16
XB1-2400-606	106	-	505	XB4-7400-809	330	-	512	XD9-0104-000	120	-	30
XB1-2400-803	110	-	502	XB4-7401-009	300	-	502	XD9-0104-000	310	-	66
XB1-2400-809	120	-	501	XB4-7403-509	190	-	502	XD9-0104-000	350	-	18
XB1-2401-809	330	-	501	XB4-7403-509	191	-	502	XD9-0104-000	350	-	22
XB1-2402-009	110	-	503	XB5-2401-609	280	-	502	XD9-0131-000	310	-	67
XB1-2402-009	111	-	501	XB6-2300-409	250	-	502	XD9-0131-000	640	-	45
XB2-7400-607	107	-	509	XB6-7300-407	107	-	505	XD9-0134-000	120	-	31
XB2-7400-607	110	-	505	XB6-7300-605	102	-	505	XD9-0137-010	310	-	68
XB2-7400-607	111	-	502	XB6-7300-609	250	-	501	XD9-0137-010	310	-	76
XB2-8300-607	130	-	502	XB6-7300-609	280	-	503	XD9-0206-000	100	-	31
XB2-8300-807	102	-	503	XB6-7400-609	101	-	504	XF2-1121-540	310	-	69
XB2-8300-807	102	-	504	XB6-7400-609	104	-	504	XF2-3110-840	103	-	24
XB2-8400-809	330	-	502	XB6-7400-807	107	-	503	XF2-3112-940	360	-	17
XB3-6300-600	360	-	501	XB6-7400-807	107	-	506	XF2-3113-140	103	-	25
XB3-6300-605	330	-	503	XB6-7401-206	100	-	505	XF9-0393-000	315	-	12
XB3-6300-605	330	-	506	XB6-7501-007	104	-	502	XG9-0111-000	640	-	46
XB3-6300-609	103	-	506	XD1-1106-215	310	-	502	XG9-0218-000	640	-	47
XB3-6300-609	260	-	502	XD1-4200-402	110	-	504	XG9-0250-000	103	-	26
XB3-6300-609	261	-	501	XD2-1100-242	360	-	502	XG9-0262-000	640	-	48
XB3-6300-609	280	-	501	XD2-1100-322	330	-	508	XG9-0403-000	310	-	70
XB3-6300-805	103	-	507	XD2-1100-402	103	-	502	XG9-0407-000	310	-	64
XB3-6300-805	104	-	507	XD2-1100-402	330	-	513	XG9-0482-000	360	-	15
XB3-6300-805	310	-	503	XD2-1100-502	103	-	503	XH9-0125-000	106	-	7
XB3-6300-805	320	-	501	XD2-1100-502	250	-	503	XZ9-0526-000	102	-	20
XB3-6400-800	100	-	502	XD2-1100-502	260	-	503	XZ9-0527-000	102	-	19
XB3-6400-800	100	-	503	XD2-1100-502	320	-	502				
XB3-6400-800	100	-	507	XD2-1100-502	330	-	509				
XB3-6400-800	101	-	501	XD2-1100-502	350	-	502				
XB3-6400-800	102	-	501	XD2-1100-502	350	-	504				
XB3-6400-800	103	-	501	XD2-1100-502	350	-	505				
XB3-6400-800	104	-	501	XD2-1100-502	350	-	506				
XB3-6400-800	104	-	508	XD2-1100-502	351	-	501				
XB3-6400-800	105	-	501	XD2-1100-502	360	-	503				
XB3-6400-800	105	-	502	XD2-1100-502	810	-	501				
XB3-6400-800	105	-	503	XD2-1100-642	103	-	504				
XB3-6400-800	106	-	501	XD2-1100-642	104	-	503				
XB3-6400-800	106	-	502	XD2-1100-642	104	-	505				
XB3-6400-800	107	-	502	XD2-1100-642	260	-	504				
XB3-6400-800	330	-	504	XD2-1100-642	330	-	510				
XB3-6400-805	100	-	501	XD2-1100-642	810	-	502				
XB3-6400-805	101	-	502	XD2-2100-402	310	-	506				
XB3-7400-809	103	-	505	XD2-2100-502	315	-	502				
XB4-7300-609	100	-	504	XD2-2100-602	120	-	503				
XB4-7300-609	300	-	506	XD2-2100-802	310	-	504				
XB4-7300-609	315	-	501	XD2-2100-802	640	-	505				

Cassette Feeding Unit-W1(Numerical Index)

NUMERICAL INDEX
Cassette Feeding Unit-W1(Numerical Index)

PARTS NUMBER	FIGURE & KEY NO.	PARTS NUMBER	FIGURE & KEY NO.	PARTS NUMBER	FIGURE & KEY NO
FB2-8506-020	Z11 - 13	FB5-5403-000	Z35 - 1	FG6-5988-000	Z20 -
FB3-2210-000	Z11 - 1	FB5-5404-000	Z40 - 33	FG6-5989-000	Z40 -
FB3-2811-000	Z12 - 1	FB5-5405-000	Z40 - 34	FG6-5993-000	Z35 -
FB3-2837-000	Z12 - 2	FB5-5412-000	Z40 - 27	FG6-5995-030	Z32 - 5
FB3-2855-020	Z40 - 2	FB5-5413-000	Z40 - 28	FG6-7820-000	Z90 -
FB3-2856-020	Z40 - 3	FB5-5415-000	Z40 - 1	FH2-6706-000	Z32 - 6
FB3-2863-000	Z40 - 4	FB5-9794-000	Z40 - 20	FH2-6706-000	ZB2 - P1
FB3-2864-000	Z40 - 5	FB5-9795-000	Z40 - 22	FH6-1477-000	Z40 - 43
FB3-2868-020	Z40 - 6	FB5-9802-000	Z40 - 17	FH6-1477-000	ZB2 - M2
FB3-2880-000	Z40 - 7	FB6-5091-000	Z40 - 75	FH6-1523-000	Z20 - 2
FB3-2881-000	Z40 - 8	FC6-9867-000	Z40 -	FH6-1523-000	ZB2 - M1
FB3-2889-000	Z40 - 88	FC8-1205-000	Z40 -	FH6-5005-020	Z40 - 44
FB3-2894-020	Z40 - 9	FE9-0290-000	Z11 - 15	FH6-5005-020	ZB2 - CL1
FB3-2897-020	Z40 - 10	FF3-1171-000	Z11 - 28	FH6-5020-000	Z40 - 45
FB3-2898-020	Z40 - 11	FF3-1318-000	Z11 - 7	FH6-5020-000	ZB2 - SL1
FB3-2937-000	Z11 - 20	FF3-2974-000	Z40 - 35	FH7-4576-000	Z32 - 3
FB3-2948-000	Z11 - 27	FF3-2975-000	Z40 - 36	FH7-4576-000	ZB2 - H1
FB3-3192-020	Z32 - 1	FF3-4175-000	Z40 - 37	FK2-0149-000	Z40 - 46
FB3-4144-000	Z11 - 2	FF3-4287-000	Z11 - 32A	FK2-0149-000	ZB2 - PS2
FB3-4149-000	Z40 - 12	FF3-4341-000	Z11 - 33A	FK2-0149-000	ZB2 - PS3
FB3-4151-000	Z12 - 3	FF5-4552-020	Z40 - 38	FK2-0212-000	ZB1 - J2060
FB3-4154-000	Z12 - 4	FF5-4634-020	Z40 - 39	FS1-1401-000	Z20 - 3
FB3-4155-000	Z40 - 13	FF5-4901-000	Z11 - 8	FS5-1164-000	Z40 - 47
FB3-7192-020	Z32 - 2	FF5-4903-000	Z40 - 40	FS5-1589-000	Z40 - 48
FB3-7216-000	Z11 - 3	FF5-4908-000	Z35 - 2	FS5-1594-020	Z35 - 4
FB4-3343-000	Z40 - 14	FF6-0087-000	Z11 - 24	FS5-1595-000	Z12 - 6
FB4-3801-000	Z40 - 15	FF6-0096-000	Z11 - 26	FS5-1598-000	Z12 - 7
FB4-5347-000	Z40 - 16	FF6-0108-000	Z40 - 86	FS5-1685-000	Z20 - 4
FB4-5349-000	Z40 - 18	FF6-0109-000	Z40 - 87	FS5-1948-000	Z40 - 49
FB4-5350-000	Z40 - 19	FF6-0297-000	Z40 - 41	FS5-3620-000	Z40 - 50
FB4-5365-000	Z40 - 21	FF6-0299-000	Z40 - 42	FS5-3821-000	Z40 - 51
FB4-5367-000	Z40 - 23	FG3-1730-000	Z11 - 12	FS5-3823-000	Z40 - 52
FB5-1471-000	Z11 - 21	FG3-1731-000	Z11 - 34	FS5-3830-000	Z40 - 53
FB5-2340-000	Z12 - 5	FG3-1732-000	Z11 - 35	FS5-3831-000	Z40 - 54
FB5-3928-000	Z11 - 18	FG3-1733-000	Z11 - 11	FS5-3833-000	Z40 - 55
FB5-4726-000	Z40 - 24	FG3-1734-000	Z11 - 19	FS5-6487-000	Z40 - 56
FB5-4727-000	Z40 - 25	FG3-1761-000	Z11 - 32	FS5-9397-000	Z11 - 29
FB5-4728-000	Z40 - 26	FG3-1761-000	ZB2 - S1	FS6-0564-000	Z40 - 57
FB5-4762-000	Z11 - 22	FG3-1896-000	Z11 - 33	FS6-0565-000	Z40 - 58
FB5-5162-000	Z11 - 4	FG3-1896-000	ZB2 - S2	FS6-0569-000	Z40 - 59
FB5-5286-000	Z40 - 29	FG6-0767-000	Z91 -	FS6-0570-000	Z40 - 60
FB5-5287-000	Z40 - 30	FG6-0767-000	ZB2 - 1	FS6-0572-000	Z40 - 61
FB5-5289-000	Z40 - 31	FG6-0767-000	ZB2 - Q1603	FS6-0574-000	Z40 - 62
FB5-5385-000	Z10 - 1	FG6-0767-000	ZB2 - Q1604	FS6-0576-000	Z40 - 63
FB5-5386-000	Z10 - 2	FG6-0767-000	ZB2 - Q1605	FS6-0629-000	Z35 - 5
FB5-5387-000	Z10 - 3	FG6-0767-000	ZB2 - Q1606	FS6-0631-000	Z40 - 64
FB5-5396-000	Z20 - 1	FG6-0767-000	ZB2 - Q1607	FS6-0633-000	Z20 - 5
FB5-5397-000	Z11 - 5	FG6-0767-000	ZB2 - Q1608	FS6-0635-000	Z20 - 6
FB5-5398-000	Z11 - 6	FG6-0767-000	ZB2 - Q1609	FS6-2308-000	Z12 - 8
FB5-5399-000	Z10 - 4	FG6-0770-000	Z90 -	FS6-2311-000	Z11 - 30
FB5-5400-000	Z11 - 14	FG6-0770-000	ZB2 - 2	FS6-2328-020	Z40 - 65
FB5-5402-000	Z40 - 32	FG6-5987-000	Z12 -	FS6-2330-000	Z40 - 66

FS6-2900-000	Z40	-	67
FS7-0103-000	Z40	-	68
FS7-0104-000	Z40	-	69

PARTS NUMBER	FIGURE & KEY NO.			PARTS NUMBER	FIGURE & KEY NO.			PARTS NUMBER	FIGURE & KEY NO		
FS7-0105-000	Z40	-	70	VS1-6321-003	ZB1	-	J1608	XD3-2200-082	Z35	-	503
FS7-0791-000	Z20	-	7	VS1-6321-004	ZB1	-	J1603	XD9-0104-000	Z40	-	80
FS7-0792-000	Z20	-	8	VS1-6321-006	ZB1	-	J10	XD9-0121-000	Z20	-	11
FS7-2287-000	Z11	-	23	VS1-7177-003	Z11	-	19A	XD9-0131-000	Z40	-	81
FS7-2288-000	Z11	-	25	VS1-7177-003	ZB1	-	J30	XD9-0131-000	Z40	-	82
FS7-2363-000	Z12	-	9	VS1-7178-003	ZB1	-	J30	XF2-1121-540	Z40	-	83
FS7-2413-000	Z40	-	71	VS1-7178-003	ZB1	-	J31	XF2-3110-840	Z40	-	84
FS7-2414-000	Z40	-	72	VS1-7178-006	ZB1	-	J10	XG3-8012-355	Z40	-	85
FS7-2775-000	Z40	-	73	VS1-7178-006	ZB1	-	J11	XZ9-0618-000	Z11	-	17
NPN	Z10	-		VS1-7178-007	ZB1	-	J651				
NPN	Z11	-		VS1-7440-006	Z11	-	9				
NPN	Z32	-		VS1-7440-006	ZB1	-	J10				
NPN	ZB1	-		VS1-7440-006	ZB1	-	J11				
NPN	ZB1	-	J1	VS3-0312-004	ZB1	-	J60				
NPN	ZB1	-	J21	VS3-0312-004	ZB1	-	J657				
NPN	ZB1	-	J22	VS3-5083-004	ZB1	-	J650				
NPN	ZB1	-	J31	VS4-0002-002	ZB1	-	J1				
NPN	ZB1	-	J60	WG8-5708-000	Z35	-	3				
NPN	ZB1	-	J1602	WG8-5708-000	ZB2	-	PS1				
NPN	ZB1	-	J1603D	WS3-5005-000	ZB1	-	J60				
NPN	ZB1	-	J1604	WS3-5005-000	ZB1	-	J657				
NPN	ZB1	-	J1740L	WS3-5018-000	ZB1	-	J2060				
NPN	ZB1	-	J1740U	WS3-5160-000	ZB1	-	J650				
NPN	ZB2	-		WS4-0217-000	ZB1	-	J1				
PCB	ZB1	-	J650	WT2-5041-000	Z32	-	4				
PCB	ZB1	-	J651	XA9-0591-000	Z40	-	77				
PCB	ZB1	-	J652	XA9-0624-000	Z20	-	10				
PCB	ZB1	-	J655	XA9-0626-000	Z11	-	31				
PCB	ZB1	-	J656	XA9-0626-000	Z35	-	6				
PCB	ZB1	-	J657	XA9-0629-000	Z11	-	16				
PCB	ZB1	-	J1601	XA9-0629-000	Z20	-	9				
PCB	ZB1	-	J1602	XA9-0633-000	Z10	-	5				
PCB	ZB1	-	J1603	XA9-0679-000	Z40	-	78				
PCB	ZB1	-	J1604	XA9-0724-000	Z40	-	79				
PCB	ZB1	-	J1607	XA9-0732-000	Z11	-	10				
PCB	ZB1	-	J1608	XB1-2300-409	Z40	-	501				
RB1-6539-000	Z40	-	74	XB1-2300-607	Z11	-	501				
RB1-6592-000	Z40	-	76	XB1-2300-609	Z32	-	503				
SYS	ZB1	-	J2060	XB1-2301-009	Z11	-	502				
VS1-5452-008	ZB1	-	J2060	XB1-2400-409	Z32	-	501				
VS1-6023-006	ZB1	-	J1740L	XB1-2400-606	Z32	-	502				
VS1-6023-006	ZB1	-	J1740U	XB4-7400-809	Z12	-	501				
VS1-6314-003	ZB1	-	J656	XB6-7400-609	Z11	-	503				
VS1-6314-003	ZB1	-	J1603D	XB6-7400-809	Z12	-	502				
VS1-6314-003	ZB1	-	J1607	XD1-1108-225	Z40	-	503				
VS1-6314-014	ZB1	-	J652	XD2-1100-502	Z35	-	501				
VS1-6314-018	ZB1	-	J655	XD2-1100-642	Z35	-	502				
VS1-6314-018	ZB1	-	J1601	XD2-1200-502	Z20	-	501				
VS1-6320-006	ZB1	-	J11	XD2-2100-402	Z40	-	504				
VS1-6321-003	ZB1	-	J21	XD2-2100-502	Z12	-	503				
VS1-6321-003	ZB1	-	J22	XD2-2100-802	Z40	-	505				
VS1-6321-003	ZB1	-	J30	XD3-1200-122	Z40	-	502				

Paper Deck-L1(Numerical Index)

NUMERICAL INDEX
Paper Deck-L1(Numerical Index)

PARTS NUMBER	FIGURE & KEY NO.	PARTS NUMBER	FIGURE & KEY NO.	PARTS NUMBER	FIGURE & KEY NO
FA6-7751-000	R11 - 1	FB4-2033-000	R40 - 35A	FF5-7535-050	R11 - 11
FA6-8257-000	R30 - 2	FB4-2034-000	R40 - 33A	FF5-7536-050	R11 - 12
FA9-2112-000	R40 - 1	FB4-4867-020	R01 - 1	FF5-7541-000	R40 - 33
FB2-7720-000	R40 - 3	FB4-4868-020	R40 - 23	FF5-7829-000	R40 - 34
FB2-7721-000	R40 - 4	FB4-4873-000	R30 - 20	FF5-7830-030	R40 - 35
FB2-7740-020	R30 - 3	FB4-4874-000	R30 - 21	FF5-8912-000	R10 - 17
FB2-7754-030	R40 - 5	FB4-4877-000	R11 - 7	FF6-0315-030	R01 - 10
FB2-7755-000	R40 - 6	FB4-4878-000	R11 - 8	FF6-0316-000	R01 - 17
FB2-7777-020	R40 - 7	FB4-4882-000	R30 - 22	FF6-1976-020	R40 - 32
FB2-8293-000	R11 - 2	FB4-4898-000	R40 - 24	FG3-1711-030	R11 - 17
FB2-8422-000	R40 - 26	FB4-4899-000	R40 - 25	FG3-1711-030	RB2 - 1
FB2-9248-000	R30 - 4	FB4-4918-020	R01 - 18	FG3-1712-020	R11 - 13
FB3-9188-020	R40 - 8	FB4-4919-000	R01 - 3	FG3-1713-000	R11 - 18
FB3-9192-020	R40 - 9	FB4-4920-020	R01 - 4	FG5-9288-020	R10 - 20
FB3-9193-020	R40 - 10	FB4-4922-000	R11 - 9	FG5-9288-020	RB2 - LED100
FB3-9195-020	R40 - 11	FB4-4925-000	R10 - 6	FG5-9288-020	RB2 - SW100
FB3-9196-020	R40 - 12	FB4-4926-000	R10 - 3	FG6-1641-020	R40 - 36
FB3-9206-000	R40 - 13	FB4-4928-000	R30 - 23	FG6-1642-020	R30 - 29
FB3-9207-030	R40 - 14	FB4-4929-000	R11 - 10	FG6-1646-000	R11 - 16
FB3-9214-000	R40 - 15	FB4-4932-000	R01 - 5	FG6-2528-000	R11 - 14
FB3-9216-000	R40 - 16	FB4-4933-000	R01 - 6	FG6-2529-000	R11 - 15
FB3-9217-000	R40 - 17	FB4-4937-000	R01 - 2	FG6-2531-010	R30 - 31
FB3-9235-000	R30 - 5	FB4-4938-000	R01 - 7	FG6-2534-000	R30 - 30
FB3-9237-000	R30 - 6	FB4-4939-000	R01 - 14	FG6-2956-010	R35 - 3
FB3-9238-000	R30 - 7	FB4-6227-000	R40 - 2	FG6-3577-050	R30 -
FB3-9240-000	R30 - 8	FB4-6576-000	R01 - 8	FG6-6011-000	R40 -
FB3-9241-000	R30 - 9	FB4-6577-000	R01 - 9	FH2-5759-000	R35 - 4
FB3-9242-000	R30 - 10	FB4-6578-000	R01 - 16	FH6-1571-020	R11 - 19
FB3-9243-000	R30 - 11	FB4-9705-020	R30 - 14	FH6-1571-020	RB2 - M1
FB3-9244-000	R30 - 12	FB4-9706-020	R30 - 13	FH7-4584-000	R35 - 5
FB3-9260-000	R11 - 3	FB4-9713-020	R30 - 45	FH7-4584-000	RB2 - H1
FB3-9261-020	R11 - 4	FB5-0553-000	R30 - 1	FH7-5826-020	R40 - 37
FB3-9270-000	R10 - 2	FB5-5422-020	R11 - 6	FH7-5826-020	RB2 - CL1
FB3-9289-000	R40 - 18	FB5-5423-000	R10 - 4	FH7-5826-020	RB2 - CL2
FB3-9290-000	R11 - 5	FB5-5424-000	R10 - 5	FK2-0126-000	R40 - 38
FB3-9291-000	R10 - 9	FB5-5425-000	R10 - 26	FK2-0126-000	RB2 - SL1
FB3-9292-000	R10 - 10	FB5-5430-020	R10 - 27	FK2-0127-000	R11 - 20
FB3-9293-000	R10 - 11	FB5-7009-000	R30 - 46	FK2-0127-000	RB2 - SL2
FB3-9711-000	R10 - 12	FF3-3462-000	R35 - 1	FK2-0149-000	R11 - 21
FB3-9713-000	R40 - 19	FF3-3464-000	R35 - 2	FK2-0149-000	R11 - 22
FB3-9714-000	R30 - 15	FF5-5282-030	R30 - 24	FK2-0149-000	R30 - 33
FB3-9720-000	R30 - 16	FF5-6148-030	R30 - 25	FK2-0149-000	R40 - 39
FB3-9723-000	R30 - 17	FF5-6157-020	R40 - 28	FK2-0149-000	RB2 - PS1
FB3-9732-000	R10 - 17A	FF5-6160-000	R30 - 26	FK2-0149-000	RB2 - PS2
FB3-9735-000	R30 - 18	FF5-6161-000	R30 - 27	FK2-0149-000	RB2 - PS3
FB3-9742-000	R30 - 19	FF5-6163-030	R10 - 18	FK2-0149-000	RB2 - PS4
FB3-9749-000	R10 - 13	FF5-6164-020	R10 - 19	FK2-0149-000	RB2 - PS5
FB3-9751-000	R10 - 14	FF5-6171-000	R30 - 28	FK2-0149-000	RB2 - PS6
FB3-9752-000	R40 - 20	FF5-6338-000	R40 - 27	FK2-0149-000	RB2 - PS7
FB4-2007-000	R40 - 21	FF5-7529-000	R40 - 29	FK2-0149-000	RB2 - PS8
FB4-2013-000	R40 - 22	FF5-7530-020	R40 - 30	FK2-0149-000	RB2 - PS9
FB4-2033-000	R40 - 34A	FF5-7532-000	R40 - 31	FK2-0212-000	RB1 - J7050

NUMERICAL INDEX
Paper Deck-L1(Numerical Index)

PARTS NUMBER	FIGURE & KEY NO.	PARTS NUMBER	FIGURE & KEY NO.	PARTS NUMBER	FIGURE & KEY NO
FK2-0262-000	R30 - 32	NPN	RB1 - J17	VS1-6321-004	RB1 - J19
FK2-0262-000	RB2 - M2	NPN	RB1 - J18	VS1-6321-004	RB1 - J20
FS1-1189-000	R11 - 23	NPN	RB1 - J21	VS1-6321-010	RB1 - J10
FS1-1189-000	R40 - 58	NPN	RB1 - J23	VS1-6321-014	RB1 - J15
FS1-1512-000	R40 - 40	NPN	RB1 - J24	VS1-6372-010	RB1 - J22
FS1-1569-000	R40 - 41	NPN	RB1 - J26	VS1-6373-010	RB1 - J22
FS1-9002-000	R01 - 12	NPN	RB1 - J27	VS1-7177-002	R11 - 32
FS1-9009-000	R11 - 24	NPN	RB1 - J28	VS1-7177-002	R40 - 36A
FS2-0450-000	R30 - 34	NPN	RB1 - J29	VS1-7177-002	RB1 - J16
FS2-0484-000	R40 - 42	NPN	RB1 - J30	VS1-7177-002	RB1 - J18
FS2-0544-000	R11 - 25	NPN	RB1 - J31	VS1-7177-002	RB1 - J21
FS2-0545-000	R11 - 27	NPN	RB1 - J202	VS1-7177-003	R30 - 29A
FS2-9343-000	R11 - 26	NPN	RB2 -	VS1-7177-003	RB1 - J25
FS5-0338-000	R40 - 43	PCB	RB1 - J1	VS1-7177-004	R11 - 13A
FS5-2291-000	R40 - 44	PCB	RB1 - J2	VS1-7177-004	RB1 - J19
FS5-2885-000	R40 - 45	PCB	RB1 - J3	VS1-7177-010	R11 - 13B
FS5-3333-000	R40 - 46	PCB	RB1 - J4	VS1-7177-010	RB1 - J10
FS5-7441-000	R40 - 50	PCB	RB1 - J5	VS1-7177-014	R11 - 13C
FS5-7442-000	R40 - 57	PCB	RB1 - J6	VS1-7177-014	RB1 - J15
FS5-8618-000	R30 - 35	PCB	RB1 - J7	VS3-5083-003	RB1 - J3
FS6-0053-020	R40 - 47	PCB	RB1 - J20	VS4-0001-003	RB1 - J201
FS6-0091-000	R40 - 48	RH2-5283-000	RB1 - J26	VS4-0001-003	RB1 - J202
FS6-0722-000	R30 - 36	RH2-5283-000	RB1 - J31	VS4-0002-003	RB1 - J201
FS6-0907-000	R40 - 49	SYS	RB1 - J7050	VT2-5161-026	RB1 - J5
FS6-0909-000	R30 - 37	VD7-0502-001	R35 - 6	WC4-0153-000	R30 - 39
FS6-0912-000	R10 - 23	VD7-0502-001	RB2 - CB1	WC4-0153-000	RB2 - SW2
FS6-0913-000	R10 - 24	VD7-0502-001	RB2 - CB2	WC4-5153-000	R11 - 34
FS6-2593-000	R11 - 28	VS1-0279-002	RB1 - J27	WC4-5153-000	RB2 - SW1
FS6-2673-000	R30 - 38	VS1-0852-007	RB1 - J1	WS3-0437-000	RB1 - J27
FS6-2674-000	R11 - 29	VS1-5452-008	RB1 - J7050	WS3-5018-000	RB1 - J7050
FS6-2675-020	R40 - 51	VS1-6302-003	RB1 - J7	WS3-5160-000	RB1 - J3
FS6-2676-000	R11 - 30	VS1-6302-010	RB1 - J4	WS3-5419-000	RB1 - J26
FS6-2677-000	R10 - 15	VS1-6313-013	RB1 - J5	WS3-5419-000	RB1 - J31
FS6-2678-030	R40 - 52	VS1-6314-008	RB1 - J6	WS3-5569-000	RB1 - J4
FS6-2895-000	R40 - 53	VS1-6314-013	RB1 - J5	WS3-5569-000	RB1 - J7
FS6-2897-000	R01 - 11	VS1-6320-004	RB1 - J19	WS3-5569-000	RB1 - J22
FS6-8412-000	R10 - 21	VS1-6320-010	RB1 - J10	WS3-5598-000	RB1 - J22
FS7-0423-000	R10 - 22	VS1-6320-014	RB1 - J15	WS4-0217-000	RB1 - J201
FS7-0801-000	R11 - 33	VS1-6321-002	RB1 - J16	WS4-0219-000	RB1 - J201
FS7-0802-000	R11 - 31	VS1-6321-002	RB1 - J18	WS4-0219-000	RB1 - J202
NPN	R01 -	VS1-6321-002	RB1 - J21	WS5-5025-000	RB1 - IL1
NPN	R10 -	VS1-6321-002	RB1 - J28	WT2-5041-000	R35 - 7
NPN	R11 -	VS1-6321-003	RB1 - J11	WT2-5410-000	R11 - 35
NPN	R35 -	VS1-6321-003	RB1 - J12	WT2-5848-000	R11 - 38
NPN	RB1 -	VS1-6321-003	RB1 - J13	XA9-0266-000	R10 - 25
NPN	RB1 - IL1	VS1-6321-003	RB1 - J14	XA9-0266-000	R35 - 8
NPN	RB1 - J2	VS1-6321-003	RB1 - J17	XA9-0721-000	R30 - 40
NPN	RB1 - J11	VS1-6321-003	RB1 - J23	XA9-0732-000	R01 - 13
NPN	RB1 - J12	VS1-6321-003	RB1 - J24	XA9-0732-000	R01 - 15
NPN	RB1 - J13	VS1-6321-003	RB1 - J25	XA9-0732-000	R10 - 7
NPN	RB1 - J14	VS1-6321-003	RB1 - J29	XA9-0732-000	R10 - 8
NPN	RB1 - J16	VS1-6321-003	RB1 - J30	XA9-0732-000	R10 - 16

XA9-0732-000	R11	- 36
XA9-0732-000	R11	- 37
XA9-0732-000	R30	- 41

PARTS NUMBER	FIGURE & KEY NO.	PARTS NUMBER	FIGURE & KEY NO.	PARTS NUMBER	FIGURE & KEY NO
XA9-0732-000	R30 - 42	XD3-1300-102	R11 - 510	4A1-2635-000	Q01 -
XA9-0732-000	R40 - 54	XD3-2200-102	R40 - 511	4A1-2636-000	Q01 -
XB1-2231-009	R11 - 501	XD3-2200-122	R30 - 512	4A1-2637-000	Q01 -
XB1-2231-009	R30 - 501	XD3-2200-142	R40 - 512	4F1-0859-000	Q30 -
XB1-2300-409	R35 - 501	XD3-2200-182	R30 - 513	FA6-0768-020	Q30 -
XB1-2300-409	R40 - 501	XF2-3228-532	R10 - 1	FB3-2812-000	Q30 - 1
XB1-2300-806	R10 - 502	XF9-0525-000	R40 - 55	FB3-3777-000	Q30 -
XB1-2400-409	R35 - 502	XG3-6012-405	R30 - 43	FB3-7204-000	Q30 -
XB1-2400-609	R01 - 501	XG9-0242-000	R40 - 56	FB5-4861-000	Q30 - 2
XB1-2400-609	R10 - 503	XG9-0250-000	R30 - 44	FB5-4862-000	Q30 - 3
XB1-2400-609	R11 - 502			FB5-4863-000	Q30 - 4
XB1-2400-609	R11 - 513			FB5-4866-000	Q30 - 5
XB1-2400-609	R30 - 502			FB5-4867-000	Q30 - 6
XB1-2400-609	R30 - 503			FB5-4869-000	Q30 - 7
XB1-2400-609	R40 - 502			FB5-4872-000	Q30 - 8
XB1-2400-806	R11 - 503			FB5-4873-000	Q30 - 9
XB1-2400-809	R01 - 502			FB5-4881-000	Q30 - 10
XB1-2400-809	R11 - 504			FB5-4885-000	Q30 - 11
XB1-2401-207	R01 - 503			FB5-4886-000	Q01 - 1
XB3-6400-809	R35 - 9			FB5-4888-000	Q30 - 12
XB4-7301-209	R10 - 507			FB5-4891-000	Q30 - 13
XB4-7301-209	R10 - 508			FB5-4900-000	Q30 - 14
XB4-7400-807	R10 - 504			FB5-4901-000	Q01 - 2
XB4-7400-807	R10 - 509			FB5-4902-000	Q01 - 3
XB4-7401-006	R10 - 510			FB5-4903-000	Q30 - 15
XB6-2400-808	R30 - 504			FB5-4904-000	Q30 - 16
XB6-7300-409	R11 - 505			FB5-4905-000	Q30 - 17
XB6-7300-409	R35 - 503			FB5-4906-000	Q30 - 18
XB6-7400-609	R30 - 505			FB5-4907-000	Q30 - 19
XB6-7400-809	R30 - 506			FB5-4908-000	Q30 - 20
XB6-7400-809	R30 - 507			FB5-4910-000	Q30 - 21
XD1-4200-402	R11 - 508			FB5-4920-000	Q30 - 22
XD2-1100-242	R30 - 508			FB5-5141-000	Q30 - 23
XD2-1100-242	R40 - 503			FB5-5142-000	Q30 - 24
XD2-1100-372	R40 - 504			FB5-5150-000	Q30 - 25
XD2-1100-402	R11 - 511			FB5-6141-000	Q01 -
XD2-1100-402	R40 - 505			FB5-6142-000	Q01 -
XD2-1100-502	R10 - 505			FB5-6144-000	Q01 -
XD2-1100-502	R11 - 509			FB5-6145-000	Q01 -
XD2-1100-502	R11 - 512			FB5-9574-000	Q30 - 53
XD2-1100-502	R30 - 509			FB5-9808-000	Q30 - 54
XD2-1100-502	R40 - 506			FB5-9811-000	Q01 - 6
XD2-1100-642	R10 - 506			FB6-2734-000	Q30 -
XD2-1100-642	R11 - 506			FC2-8575-000	Q30 -
XD2-1100-642	R11 - 507			FC2-8577-000	Q30 -
XD2-1100-642	R30 - 510			FE9-0158-000	Q30 -
XD2-1100-642	R30 - 511			FF6-0132-000	Q30 - 26
XD2-1100-642	R40 - 507			FG3-1878-000	Q30 - 48
XD2-2300-402	R10 - 501			FG3-1879-000	Q30 - 50
XD3-1200-122	R40 - 508			FG3-1880-000	Q30 - 51
XD3-1200-142	R40 - 509			FG5-5946-340	Q30 -
XD3-1300-082	R40 - 510			FG6-5693-000	Q30 -

Inner 2way Tray-A1(Numerical Index)

FH6-1850-000	Q30	-	27
FH6-1850-000	QB2	-	M7
FH6-1850-000	QB2	-	M8

PARTS NUMBER	FIGURE & KEY NO.		
FH6-5019-000	Q30	-	28
FH6-5019-000	QB2	-	SL3
FK2-0149-000	Q30	-	29
FK2-0149-000	QB2	-	PS19
FK2-0149-000	QB2	-	PS20
FK2-0149-000	QB2	-	PS21
FK2-0149-000	QB2	-	PS24
FS1-1202-000	Q30	-	30
FS1-1508-000	Q30	-	31
FS5-1377-000	Q30	-	32
FS5-1943-000	Q30	-	33
FS5-3835-000	Q30	-	56
FS5-9661-000	Q01	-	4
FS6-2337-000	Q30	-	34
FS7-0732-000	Q30	-	35
FS7-0733-000	Q30	-	36
FS7-0734-000	Q30	-	37
FS7-0744-000	Q30	-	38
FS7-0748-000	Q30	-	39
FS7-2391-000	Q30	-	40
FS7-2392-000	Q30	-	41
FS7-2393-000	Q30	-	42
FS7-2397-000	Q30	-	43
NPN	Q01	-	
NPN	QB1	-	
NPN	QB1	-	J3131
NPN	QB1	-	J3132
NPN	QB1	-	J3133
NPN	QB1	-	J3901
NPN	QB1	-	J3902
NPN	QB1	-	J3903
NPN	QB1	-	J3905
NPN	QB2	-	
RF5-1448-000	Q30	-	44
SYS	QB1	-	J3130
SYS	QB1	-	J3900
VS1-6321-002	QB1	-	J3904
VS1-6321-002	QB1	-	J3905
VS1-6321-003	QB1	-	J3132
VS1-6321-003	QB1	-	J3133
VS1-6321-003	QB1	-	J3902
VS1-6321-003	QB1	-	J3903
VS1-6321-004	QB1	-	J3131
VS1-6321-004	QB1	-	J3901
VS1-6321-012	QB1	-	J3130
VS1-6321-013	QB1	-	J3900
VS1-7177-002	Q30	-	45
VS1-7177-002	QB1	-	J3904
VS1-7177-002	QB1	-	J3905
VS1-7177-004	Q30	-	48A
VS1-7177-004	QB1	-	J3131
VS1-7177-004	QB1	-	J3901

PARTS NUMBER	FIGURE & KEY NO.		
WT2-5565-000	Q30	-	49
XA9-0606-000	Q30	-	46
XA9-0629-000	Q01	-	5
XA9-1116-030	Q30	-	47
XB1-2400-409	Q30	-	
XB1-2400-809	Q30	-	501
XB1-2401-406	Q01	-	501
XB4-7400-606	Q30	-	
XD2-1100-322	Q30	-	502
XD2-1100-502	Q30	-	503
XD3-1300-102	Q30	-	505
XD3-2200-122	Q30	-	504
XF2-1106-240	Q30	-	55

Envelope Feeder Attachment-B1(Numerical Index)

PARTS NUMBER	FIGURE & KEY NO		
FB3-2903-000	L10	-	2
FB3-2908-020	L10	-	4
FB3-2911-000	L10	-	1
FB3-2912-000	L10	-	5
FB3-2915-000	L10	-	6
FB3-2916-000	L10	-	2
FB3-2966-000	L10	-	7
FB5-9575-000	L10	-	8
FS1-9200-000	L10	-	3
NPN	L10	-	
XA9-0929-000	L10	-	9

Token Ring Network Interface Adapter iN-TR2(Numerical Index)

FF3-4343-000	N90	-	IC6
FG6-5796-000	N90	-	

PARTS NUMBER	FIGURE & KEY NO.	PARTS NUMBER	FIGURE & KEY NO.	PARTS NUMBER	FIGURE & KEY NO
Super G3 FAX Board-J1/ J2(Numerical Index)		FB4-6724-000	G90 - 16	HK1-0547-000	G90 - 15
		FB4-6728-000	G90 - 16	NPN	G90 -
		FB5-5120-000	G90 - 18	NPN	GB1 -
		FB5-5126-000	G91 - 1	NPN	GB1 - J9021
		FB6-2875-000	G90 - 18	NPN	GB2 -
		FC6-5059-000	G91 - 2	PCB	GB1 - J1
		FG3-1582-000	G90 - 6	PCB	GB1 - J2
		FG3-1582-000	GB2 - 3	PCB	GB1 - J3
		FG3-1983-000	G90 - 9	PCB	GB1 - J4
		FG3-1984-000	G90 - 10	PCB	GB1 - J6
		FG3-1985-000	G90 - 11	PCB	GB1 - J7
		FG3-1986-000	G90 - 12	PCB	GB1 - J30
		FG3-1988-000	G90 - 13	PCB	GB1 - J31
		FG3-1989-000	G90 - 14	PCB	GB1 - J101
		FG3-1991-000	G90 - 11	PCB	GB1 - J102
		FG3-1992-030	G90 - 6	PCB	GB1 - J103
		FG3-1992-030	GB2 - 3	PCB	GB1 - J104
		FG3-2497-310	G90 - 8	PCB	GB1 - J105
		FG3-2497-310	G90 - 8	PCB	GB1 - J106
		FG3-2658-000	G90 - 11	PCB	GB1 - J106
		FG3-2707-000	G90 - 8	PCB	GB1 - J712
		FG6-5798-000	G90 - 1	PCB	GB1 - J712
		FG6-5798-000	GB2 - 4	PCB	GB1 - J713
		FG6-5799-000	G91 -	PCB	GB1 - J713
		FG6-5802-000	G90 - 1	PCB	GB1 - J714
		FG6-5802-000	GB2 - 4	PCB	GB1 - J714
		FG9-3920-000	G90 - 6	PCB	GB1 - J715
		FG9-3920-000	GB2 - 3	PCB	GB1 - J715
		FG9-3921-000	G90 - 6	PCB	GB1 - J911
		FG9-3921-000	GB2 - 3	SYS	GB1 - J712
		FH2-6928-000	G90 - 2	SYS	GB1 - J713
		FH2-6928-000	GB1 - J1	SYS	GB1 - J900
		FH2-6928-000	GB1 - J102	SYS	GB1 - J1005
		FH2-6962-000	G90 - 17	SYS	GB1 - J2002
		FH2-6962-000	GB1 - J6	SYS	GB1 - J9020
		FH2-6962-000	GB1 - J103	SYS	GB1 - J9021
		FK2-0428-000	G91 - 3	VS1-5452-006	GB1 - J2
		FK2-0428-000	GB2 - SP1	VS1-5452-006	GB1 - J101
		FM2-2795-000	G90 - 5	VS1-6302-002	GB1 - J715
		FM2-2795-000	GB2 - 2	VS1-6302-014	GB1 - J104
		FM2-2796-000	G90 - 5	VS1-6313-020	GB1 - J31
		FM2-2796-000	GB2 - 2	VS1-6313-020	GB1 - J1005
		FM2-3815-000	G90 - 5	VS1-6314-020	GB1 - J31
		FM2-3815-000	GB2 - 2	VS1-6314-020	GB1 - J1005
		FM2-3816-000	G90 - 5	VS1-6702-010	GB1 - J900
		FM2-3816-000	GB2 - 2	VS1-7177-002	G90 - 12A
		FM2-4560-000	G90 - 7	VS1-7177-002	GB1 - J9020
		FM2-4560-000	GB2 - 1	VS1-7178-002	GB1 - J9020
		HH2-1914-000	G90 - 15	VS3-0143-002	GB1 - J105
		HH2-2074-000	G90 - 15	VS3-0143-006	GB1 - J7
		HH2-2478-000	G90 - 15	VS3-0143-011	GB1 - J911
		HH2-2830-000	G90 - 15	VS3-5080-002	GB1 - J4

VS3-5080-005	GB1	-	J3
VS3-5080-007	GB1	-	J3
VS3-5080-007	GB1	-	J30

PARTS NUMBER	FIGURE & KEY NO.			PARTS NUMBER	FIGURE & KEY NO.			PARTS NUMBER	FIGURE & KEY NO		
VS3-5080-007	GB1	-	J911	FG3-1934-020	E90	-	1				
VS3-5083-003	GB1	-	J714	NPN	E90	-					
VS4-0002-002	G90	-	3								
VS4-0002-002	GB1	-	J2002								
VT2-5161-040	GB1	-	J31								
VT2-5161-040	GB1	-	J1005								
WE8-5780-000	G90	-	11A								
WE8-5800-000	G90	-	9A								
WS1-5370-000	G90	-	19								
WS3-5160-000	GB1	-	J714								
WS3-5251-000	GB1	-	J7								
WS3-5251-000	GB1	-	J105								
WS3-5251-000	GB1	-	J911								
WS3-5569-000	GB1	-	J104								
WS3-5569-000	GB1	-	J715								
WS3-5720-000	GB1	-	J900								
WS4-0217-000	GB1	-	J2002								
WT1-5155-000	GB1	-	J3								
WT1-5155-000	GB1	-	J3								
WT1-5155-000	GB1	-	J4								
WT1-5155-000	GB1	-	J30								
WT1-5155-000	GB1	-	J911								
WT1-5155-000	GB1	-	J911								
WT8-5076-000	G90	-	4								
XB3-6400-800	G91	-	501								
XB6-7300-607	G90	-	501								
XB6-7300-607	G91	-	502								

CONTROL FONT ROM CFR-M1(Numerical Index)

Image Reader-B1(Parts Catalog)

Image Reader-B1

AB SIZE	**F13-9502**	**XHP00001-**
A/INCH SIZE	**F13-9512**	**XHQ00001-**
A SIZE	**F13-9522**	**XHR00001-**
AB/INCH SIZE	**F13-9532**	**XHS00001-**

Contents

A ASSEMBLY LOCATION DIAGRAM 2-1
001 MOUNTING HARDWARE 1 2-2
002 MOUNTING HARDWARE 2 2-4
210 READER ASSEMBLY 2-5
420 MIRROR ASSEMBLY 1 2-11
430 MIRROR ASSEMBLY 2 2-12
931 READER CONTROLLER PCB ASSEMBLY 2-13
B1 LIST OF CONNECTORS 2-14
B2 LIST OF ELECTRIC PARTS 2-18

FIGURE A
ASSEMBLY LOCATION DIAGRAM

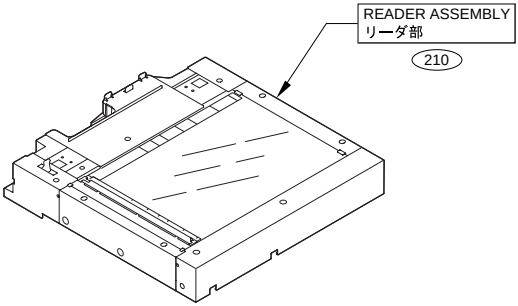

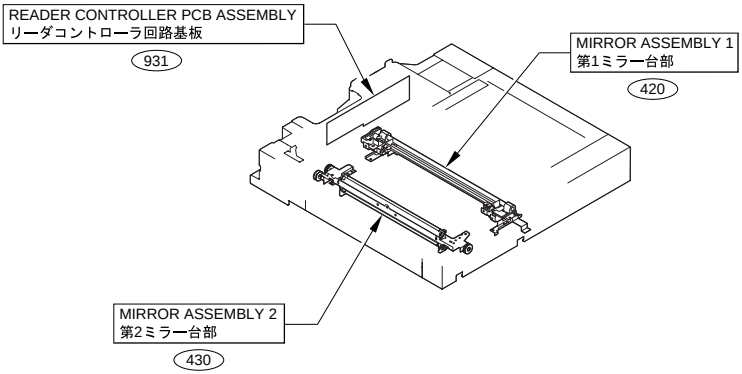

FIGURE 001
MOUNTING HARDWARE 1

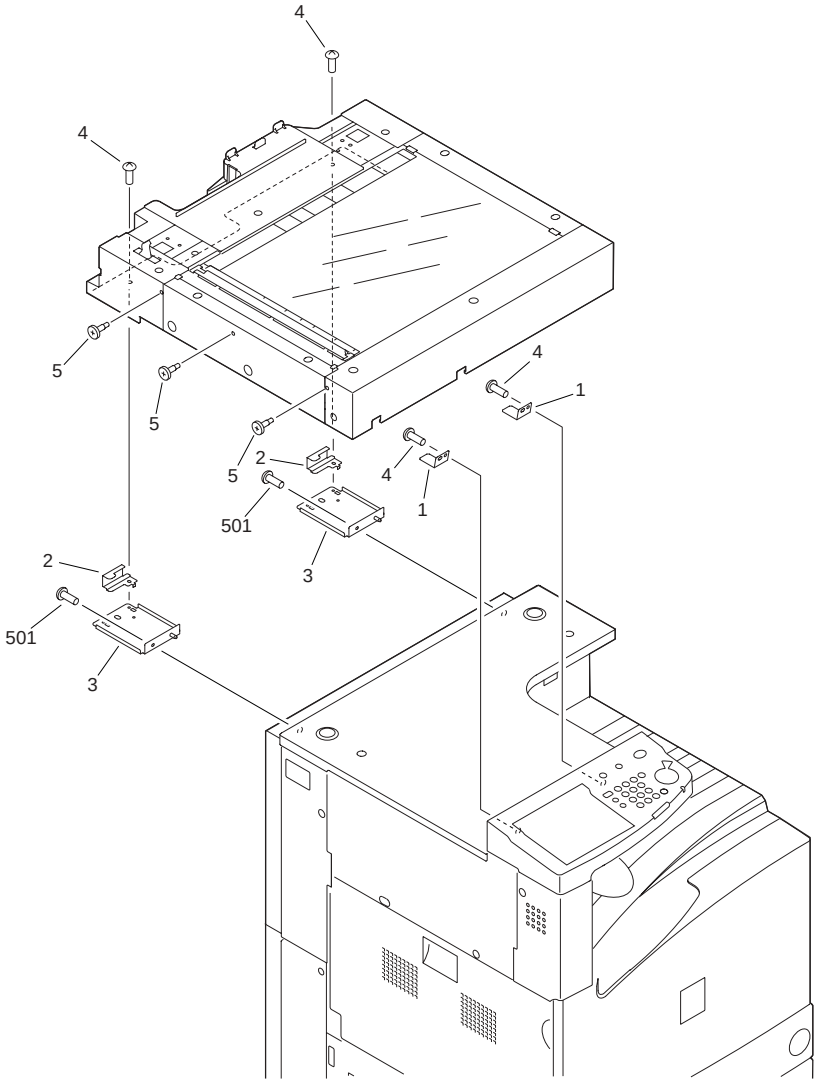

FIGURE & KEY NO.	PARTS NUMBER	RANK	Q'TY	DESCRIPTION	SERIAL NUMBER/ REMARKS	SVC
Fig.001	NPN		RF	MOUNTING HARDWARE 1		
1	FB6-0334-000		2	CLAW, READER FIXING, FRONT		
2	FF6-2006-000		2	PLATE, READER FIXING		

FIGURE & KEY NO.	PARTS NUMBER	RANK	Q'TY	DESCRIPTION	SERIAL NUMBER/ REMARKS	SVC
3	FF6-1484-000		2	PLATE, READER FIXING		
4	XA9-1031-000		4	SCREW,MACH.,TRUSS HEAD,M4X8		
5	FS5-9665-040		3	SCREW, MIRROR FIXED		
501	XB1-2401-007		2	SCREW,MACH.,TRUSS HEAD,M4X10		

FIGURE 002
MOUNTING HARDWARE 2

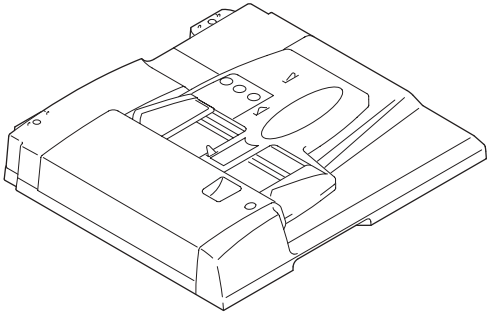

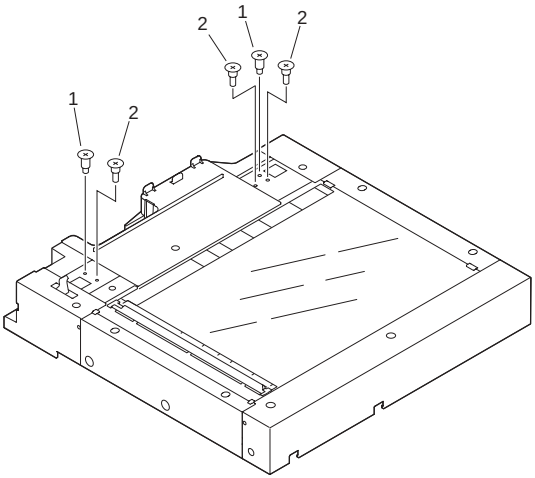

FIGURE & KEY NO.	PARTS NUMBER	RANK	Q'TY	DESCRIPTION	SERIAL NUMBER/ REMARKS	SVC
Fig.002	NPN		RF	MOUNTING HARDWARE 2		
1	FS2-9540-000		2	SCREW,STEPPED,M5		
2	FS2-9542-020		3	SCREW,STEPPED		

FIGURE 210
READER ASSEMBLY

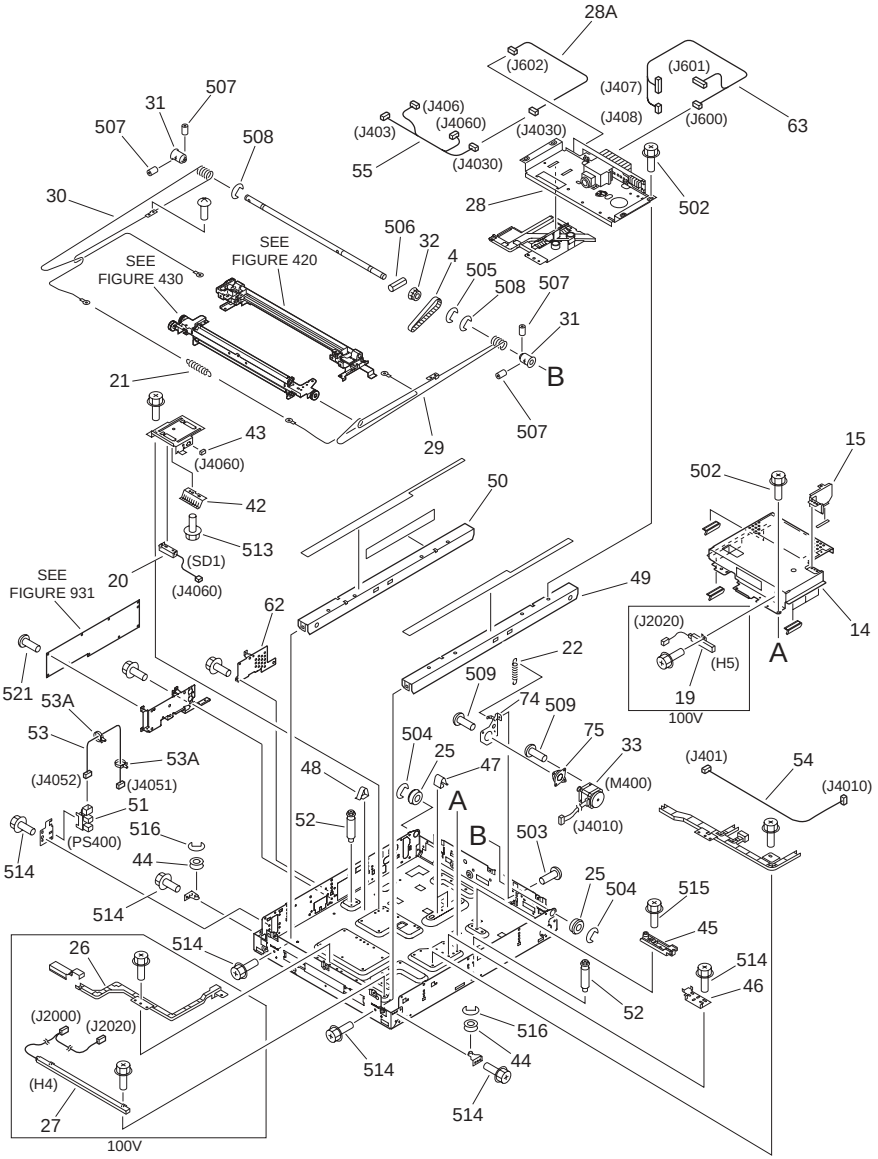

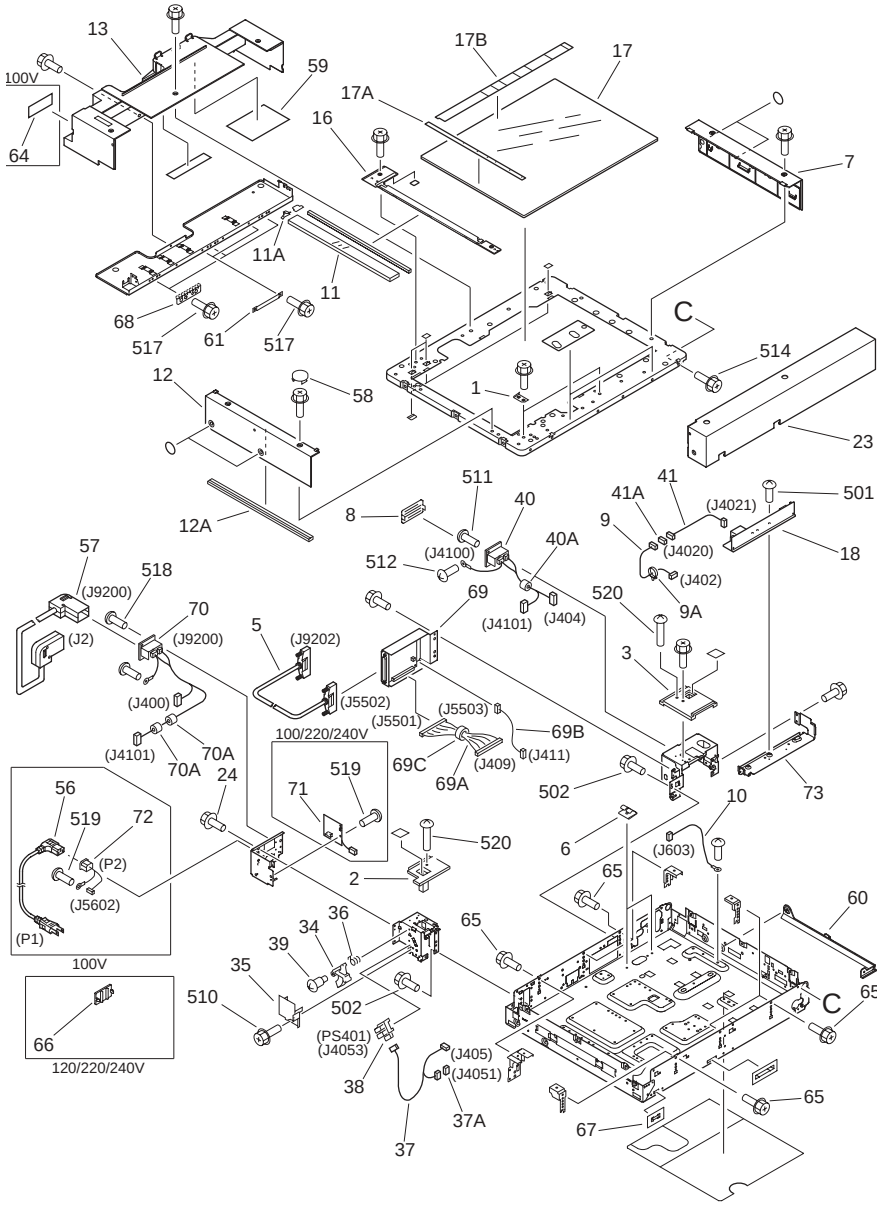
13
100V
64
59
17B
17
17A
16
7
11A
11
68
517
61
517
C
514
12
58
1
23
12A
511
40
41
41A
501
(J4021)
8
9
(J4020)
18
57
518
(J9200)
(J4100)
40A
512
(J402)
70
69
520
9A
(J2)
(J9200)
5
(J9202)
(J4101)
(J404)
3
(J400)
(J5502)
(J5501)
(J5503)
69B
100/220/240V
(J4101)
70A
70A
69C
(J409)
(J411)
69A
502
73
24
519
56
71
10
519
72
520
6
(P2)
(J603)
2
65
(J5602)
(P1)
100V
36
34
65
60
39
35
510
502
C
65
66
(PS401)
(J4053)
(J405)
(J4051)
120/220/240V
38
65
37A
67
37

FIGURE & KEY NO.	PARTS NUMBER	RANK	Q'TY	DESCRIPTION	SERIAL NUMBER/ REMARKS	SVC
Fig.210	NPN		RF	READER ASSEMBLY		
1	FB4-5402-030		2	PLATE, GLASS		
2	FB5-3058-000		1	COVER, POCKET, LEFT		
3	FB5-3059-000		1	COVER, POCKET, RIGHT		
4	FB5-5206-000		1	BELT, SCANNER DRIVE		
5	FH2-6756-020		1	CABLE, DDI-S INTERFACE	J5502,9202	
6	FB5-5239-000		2	PLATE, INVERTER		
7	FB5-5221-000		1	PANEL, READER, RIGHT		
8	FH2-6552-000		1	COVER, CONNECTOR		
9	FF3-4279-000		1	CABLE, INVERTER	J402,4020	
9A	WT2-5565-000		1	CLAMP, CABLE		
10	FF3-4284-000		1	CABLE, CCD GROUNDING	J603	
11	FF5-9816-000		1	GLASS, READER		
11A	FB5-4586-000		1	SPRING, GROUNDING		
12	FF6-0342-000		1	PANEL, READER, LEFT		
12A	FB5-5567-000		1	SEAL, GLASS, 2		
13	FF6-0384-020		1	PANEL, REAR		
14	FF6-0328-000		1	SHIELD, CCD		
15	FF6-0329-000		1	SHIELD, MOTOR		
16	FF6-0340-000		1	GUIDE, PAPER		
17	FF9-1858-000		1	GLASS, COPYBOARD	AB SIZE	
17	FF9-1859-000		1	GLASS, COPYBOARD	INCH/A SIZE	
17	FF9-1860-000		1	GLASS, COPYBOARD	A SIZE	
17	FF9-1861-000		1	GLASS, COPYBOARD	INCH/AB SIZE	
17A	FB5-3052-000		1	PLATE, WIDTH INDEX	AB SIZE	
17A	FB5-4557-000		1	PLATE, WIDTH INDEX	INCH/A SIZE	
17A	FB5-4558-000		1	PLATE, WIDTH INDEX	A SIZE	
17A	FB5-4559-000		1	PLATE, WIDTH INDEX	INCH/AB SIZE	
17B	FB5-4535-000		1	PLATE, LENGTH INDEX	AB SIZE	
17B	FB5-4553-000		1	PLATE, LENGTH INDEX	INCH/A SIZE	
17B	FB5-4554-000		1	PLATE, LENGTH INDEX	A SIZE	
17B	FB5-4555-000		1	PLATE, LENGTH INDEX	INCH/AB SIZE	

FIGURE & KEY NO.	PARTS NUMBER	RANK	Q'TY	DESCRIPTION	SERIAL NUMBER/ REMARKS	SVC
18	FH3-7211-020		1	LAMP INVERTER PCB ASSEMBLY		
19	FH7-4666-020		1	HEATER, PLATE	100V H5 J2020	
20	FH7-7550-020		1	PAPER DETECT SENSOR UNIT	SD1 J4060	
21	FS6-2913-000		1	SPRING, TENSION		
22	FS7-2399-000		1	SPRING, TENSION		
23	FF6-0346-000		1	PANEL, READER, FRONT		
24	XA9-0721-010		1	SCREW,RS,M4X10		
25	XG9-0250-000		2	BEARING, BALL		
26	FB5-3498-000		1	GUIDE, HEATER CABLE	100V	
27	FH7-4665-020		1	HEATER, PLATE	100V H4 J2000,2020	
28	FG6-7982-000		1	CCD UNIT		
28A	FF3-4269-000		1	CABLE, CCD POWER SUPPLY	J602,4030	
29	FB5-3085-020		1	WIRE, SCANNER, FRONT (MECH)		
30	FB5-3086-020		1	WIRE, SCANNER, REAR (MECH)		
31	FB5-3087-000		2	PULLEY		
32	FS5-3826-000		1	PULLEY, 36T		
33	FH6-1857-000		1	MOTOR,STEPPING	M400 J4010	
34	FB5-3090-000		1	LEVER, SENSOR		
35	FB5-3635-000		1	COVER, SENSOR		
36	FB5-3636-000		1	SPRING, TORSION		
37	FF3-4280-000		1	CABLE, DF MOUNT, LEFT	J405,4051,4053	
37A	VS1-7177-003		1	CONNECTOR, SNAP TIGHT	J4051	
38	FH7-7557-020		1	PHOTO-INTERRUPTER	PS401 J4053	
39	FS5-9227-020		1	SCREW,STEPPED,M4		
40	FG3-1679-000		1	CABLE, ADF-S, LATTICE	J404,4100,4101	
40A	WE8-5858-000		1	CORE, FERRITE		
41	FF3-4273-000		1	CABLE, INVERTER CONNECT	J4020,4021	
41A	VS1-7173-005		1	CONNECTOR, SNAP TIGHT	J4020	
42	FB5-5551-000		1	SPRING, LEAF		
43	VS1-7177-003		1	CONNECTOR, SNAP TIGHT	J4060	
44	FB1-7109-000		2	PULLEY		
45	FB3-2398-020		1	LEVER		

FIGURE & KEY NO.	PARTS NUMBER	RANK	Q'TY	DESCRIPTION	SERIAL NUMBER/ REMARKS	SVC
46	FB5-3046-030		1	PLATE, SKEW ADJUSTMENT		
47	FB5-5228-000		2	SPRING, LEAF		
48	FB5-5544-000		1	SPRING, LEAF		
49	FF5-9820-020		1	RAIL, SCANNER, FRONT		
50	FF5-9821-030		1	RAIL, SCANNER, REAR		
51	FH7-7557-020		1	PHOTO-INTERRUPTER	PS400 J4052	
52	FS5-9642-000		2	SCREW,STEPPED,M4		
53	FG6-4971-000		1	CABLE, HOME POSITION SENSOR	J4051,4052	
53A	WT2-5565-000		2	CLAMP, CABLE		
54	FF3-4267-000		1	CABLE, SCANNER MOTOR	J401,4010	
55	FG3-1683-000		1	CABLE, PAPER DETECT SENSOR	J403,406,4030,4060	
56	RH2-5191-000		1	CORD, POWER	100V P1	
57	FG6-4985-020		1	CABLE, DDI-S POWER SUPPLY	J2,9200	
58	FB5-5555-000		2	COVER, BLANKING		
59	FB5-5593-000		1	LABEL,'SERVICE'		
60	FB6-0340-000		1	GUIDE, PAPER		
61	FB6-0344-000		2	RETAINER, GASKET		
62	FF6-0331-000		1	PLATE, BLANKING		
63	FG3-2397-000		1	CABLE, CCD	J407,408,600,601	
64	FS6-8478-000		1	LABLE, POWER	100V	
65	XA9-0642-000		6	SCREW,RS,M3X6		
66	FB5-5458-000		1	COVER, INLET	120/220/240V	
67	FB5-5462-000		1	SHEET, FIXED SUPPORT		
68	FB5-5467-000		3	SPRING, LEAF		
69	FG6-7978-000		1	DDIS PCB ASSEMBLY		
69A	FG3-2398-000		1	CABLE, FLAT	J409,5501	
69B	FG3-2399-000		1	CABLE, DDIS POWER SUPPLY	J411,5503	
69C	FG3-2398-000		1	CABLE,FLAT		
70	FG3-1680-000		1	CABLE, POWER SUPPLY, LATTICE	J400,4101,9200	
70A	WE8-5858-000		2	CORE, FERRITE		
71	FG3-1682-000		1	FUSE PCB ASSEMBLY	100/220/240V	
72	FG6-5956-020		1	CABLE, INLET	100V P2 J5602	

FIGURE & KEY NO.	PARTS NUMBER	RANK	Q'TY	DESCRIPTION	SERIAL NUMBER/ REMARKS	SVC
73	FB5-5219-000		1	PLATE, INVERTER		
74	FB5-5216-000		1	MOUNT, MOTOR		
75	FB5-3637-000		1	MOUNT, MOTOR, SHOCK ABSORBING		
501	XB1-2300-407		2	SCREW,MACH.,TRUSS HEAD,M3X4		
502	XB3-6400-800		67	SCREW,RS,M4X8		
503	XB6-7300-409		2	SCREW,TP,M3X4		
504	XD2-1100-642		4	RING,E		
505	XD2-1100-642		1	RING,E		
506	XD3-1250-142		1	PIN,SPRING		
507	XB6-2400-508		4	SETSCREW,M4X5		
508	XD2-1100-642		2	RING,E		
509	XB1-2300-609		4	SCREW,MACH.,TRUSS HEAD,M3X6		
510	XB3-6400-800		1	SCREW,RS,M4X8		
511	XB1-2300-609		2	SCREW,MACH.,TRUSS HEAD,M3X6		
512	XB2-7400-609		1	SCREW,W/WASHER,M4X6		
513	XB3-6400-800		1	SCREW,RS,M4X8		
514	XB3-6400-800		19	SCREW,RS,M4X8		
515	XB3-6401-205		1	SCREW,RS,M4X12		
516	XD2-1100-642		2	RING,E		
517	XB3-6400-800		6	SCREW,RS,M4X8		
518	XB1-2300-609		3	SCREW,MACH.,TRUSS HEAD,M3X6		
519	XB2-7400-607		2	SCREW,W/WASHER,M4X6	100/220/240V	
520	XB6-7501-007		2	SCREW,TP,M5X10		
521	XB6-7300-607		10	SCREW,TP,M3X6		

FIGURE 420
MIRROR ASSEMBLY 1

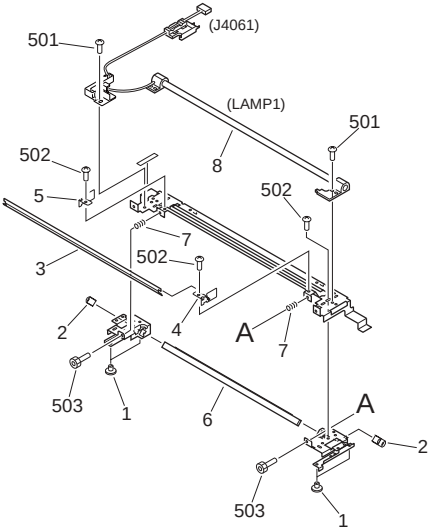

FIGURE & KEY NO.	PARTS NUMBER	RANK	Q'TY	DESCRIPTION	SERIAL NUMBER/ REMARKS	SVC
Fig.420	FG6-6018-000		1	MIRROR ASSEMBLY 1		
1	FB3-2411-000		4	PIN, SLIDE		
2	FB4-5434-000		2	SPRING, LEAF		
3	FB5-5211-000		1	REFLECTOR		
4	FB5-5212-000		1	SIDE REFLECTOR, FRONT		
5	FB5-5213-000		1	SIDE REFLECTOR, REAR		
6	FF6-0333-000		1	MIRROR UNIT 1		
7	FS6-2341-000		2	SPRING, COMPRESSION		
8	FG6-6028-000		1	LAMP, XENON FLUORESCENT	LAMP1 J4061	
501	XB2-8300-809		3	SCREW,W/WASHER,M3X8		
502	XB6-7300-409		4	SCREW,TP,M3X4		
503	XB7-1030-169		2	SCREW,ALLEN HEAD,M3X16		

FIGURE 430
MIRROR ASSEMBLY 2

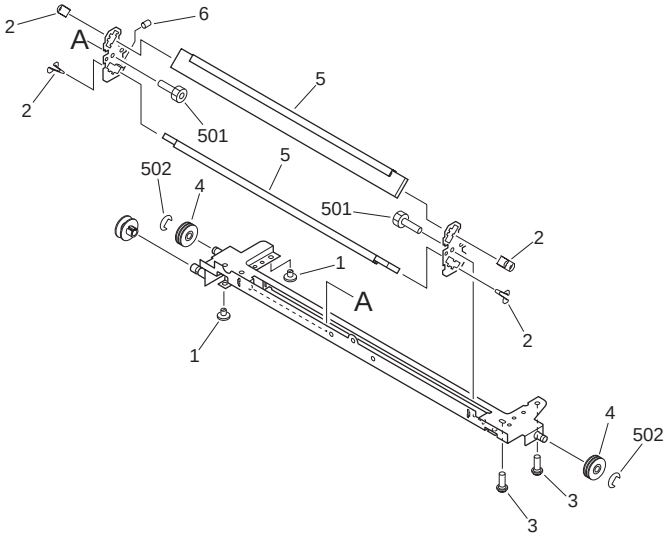

FIGURE & KEY NO.	PARTS NUMBER	RANK	Q'TY	DESCRIPTION	SERIAL NUMBER/ REMARKS	SVC
Fig.430	FG6-6019-000		1	MIRROR ASSEMBLY 2		
1	FB3-2411-000		2	PIN, SLIDE		
2	FB6-0342-000		4	SPRING, LEAF		
3	FB4-5435-000		2	SLIDER B		
4	FB5-5226-00U		1	RECONDITIONED PULLEY		
5	FF6-0334-000		2	MIRROR UNIT 2/3		
6	XA9-0425-030		1	SETSCREW, HEX SOCKET		
501	XB7-1030-069		2	SCREW,ALLEN HEAD,M3X6		
502	XD2-1100-502		2	RING,E		

FIGURE 931
READER CONTROLLER PCB ASSEMBLY

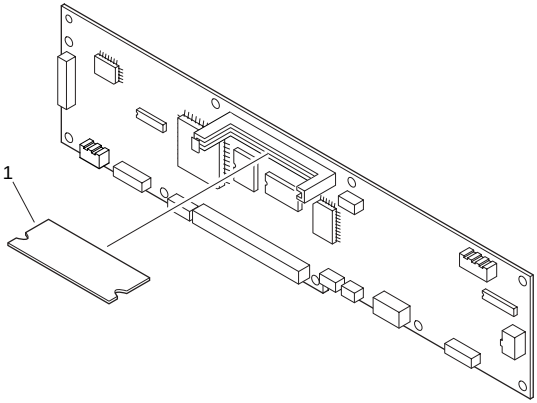

FIGURE & KEY NO.	PARTS NUMBER	RANK	Q'TY	DESCRIPTION	SERIAL NUMBER/ REMARKS	SVC
Fig.931	FG3-1681-000		1	READER CONTROLLER PCB ASSEMBLY		
1	FG3-1736-070		1	DIMM ASSEMBLY		
FU921	VD7-2865-001		1	FUSE, 60V, 5A		
IC404	FH4-6300-000		1	IC, M38871M2-010GP, MCU		
IC405	FH4-5987-000		1	IC,AN2190FHQ,D/A CONVERTER		
IC407	FH4-6102-020		1	IC, UPD82425GD-001-LML		
IC424	FK2-0248-000		1	IC, SLA7044MC		
IC920	FH4-5855-010		1	IC, H8D2760A, PWM CONTROL		
L924	FH3-0932-010		1	COIL, CHOKE		

FIGURE B1
LIST OF CONNECTORS

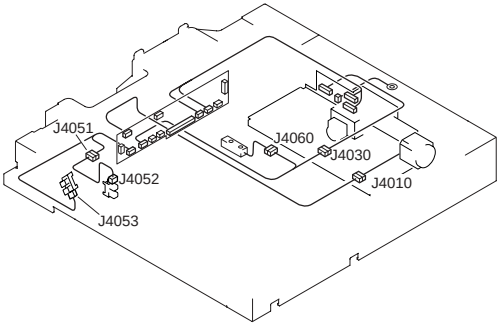

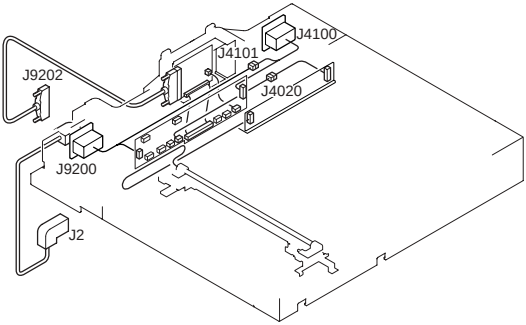

100V

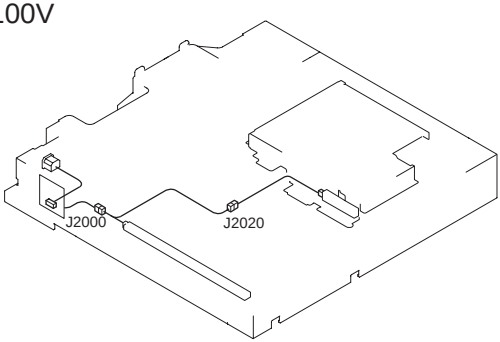

FIGURE & KEY NO.	PARTS NUMBER	RANK	Q'TY	DESCRIPTION	SERIAL NUMBER/ REMARKS	SVC
Fig.B1	NPN		RF	LIST OF CONNECTORS		
J2	SYS			TO PRINTER		
J2	FH2-6856-000		1	HOUSING		

FIGURE & KEY NO.	PARTS NUMBER	RANK	Q'TY	DESCRIPTION	SERIAL NUMBER/ REMARKS	SVC
J2	FH2-5821-000		1	CONNECTOR, 12P, MALE		
J2	WS3-5264-000		5	SOCKET CONTACT		
J400	PCB			READER CONTROLLER		
J400	VS3-5083-002		1	CONNECTOR, 2P, FEMALE		
J400	WS3-5160-000		2	SOCKET CONTACT, 18-24AWG		
J401	PCB			READER CONTROLLER		
J401	VS1-6302-006		1	CONNECTOR, 6P, MALE		
J401	WS3-5569-000		6	PIN, CONTACT		
J402	PCB			READER CONTROLLER		
J402	VS1-6314-004		1	CONNECTOR, 4P, FEMALE		
J403	PCB			READER CONTROLLER		
J403	VS3-5083-004		1	CONNECTOR, 4P, FEMALE		
J403	WS3-5160-000		4	SOCKET CONTACT, 18-24AWG		
J404	PCB			READER CONTROLLER		
J404	VS1-5452-007		1	CONNECTOR, 7P, FEMALE		
J405	PCB			READER CONTROLLER		
J405	VS1-6314-006		1	CONNECTOR, 6P, FEMALE		
J406	PCB			READER CONTROLLER		
J406	VS1-6314-003		1	CONNECTOR, 3P, MALE		
J407	PCB			READER CONTROLLER		
J407	VS1-6314-010		1	CONNECTOR, 10P, FEMALE		
J408	PCB			READER CONTROLLER		
J408	VS1-6314-005		1	CONNECTOR, 5P, FEMALE		
J409	PCB			READER CONTROLLER		
J409	VS1-6407-080		1	CONNECTOR, 80P, FEMALE		
J411	PCB			READER CONTROLLER		
J411	VS1-6302-003		1	CONNECTOR, 3P, FEMALE		
J411	WS3-5569-000		2	PIN, CONTACT		
J600	PCB			CCD		
J600	VS1-6313-011		1	CONNECTOR, 11P, FEMALE		
J601	PCB			CCD		
J601	VS1-6313-004		1	CONNECTOR, 4P, FEMALE		

FIGURE & KEY NO.	PARTS NUMBER	RANK	Q'TY	DESCRIPTION	SERIAL NUMBER/ REMARKS	SVC
J602	PCB			CCD		
J602	VS3-5083-004		1	CONNECTOR, 4P, FEMALE		
J602	WS3-5160-000		4	SOCKET CONTACT, 18-24AWG		
J603	PCB			CCD		
J603	VS3-5083-002		1	CONNECTOR, 2P, FEMALE		
J603	WS3-5160-000		1	SOCKET CONTACT, 18-24AWG		
J2000	PCB			FUSE	100V	
J2000	NPN			MIRROR HEATER	100V H4	
J2020	NPN			LENS HEATER	100V H5	
J2020	NPN			MIRROR HEATER	100V H4	
J4010	NPN			OPTICAL MOTOR	M400	
J4010	VS1-6302-006		1	CONNECTOR, 6P, MALE		
J4010	WS3-5569-000		6	PIN, CONTACT		
J4020	VS1-6314-005		2	CONNECTOR, 5P, FEMALE		
J4020	VS1-7173-005		1	CONNECTOR, SNAP TIGHT		
J4021	PCB			LAMP INVERTER		
J4021	VS1-6314-004		1	CONNECTOR, 4P, FEMALE		
J4030	VS1-5729-004		1	CONNECTOR, 4P, MALE		
J4030	VS3-5083-004		1	CONNECTOR, 4P, FEMALE		
J4030	WS3-5301-000		4	PIN CONTACT		
J4030	WS3-5160-000		4	SOCKET CONTACT, 18-24AWG		
J4051	VS1-6320-003		2	CONNECTOR, 3P, MALE		
J4051	VS1-7177-003		1	CONNECTOR, SNAP TIGHT		
J4052	NPN			OPTICAL HP SENSOR	PS400	
J4052	VS1-6321-003		1	CONNECTOR, 3P, FEMALE		
J4053	NPN			COPYBOARD COVER OPEN SENSOR	PS401	
J4053	VS1-6321-003		1	CONNECTOR, 3P, FEMALE		
J4060	NPN			PAPER DETECT SENSOR	SD1	
J4060	VS1-6321-003		1	CONNECTOR, 3P, FEMALE		
J4060	VS1-7177-003		1	CONNECTOR, SNAP TIGHT		
J4061	PCB			LAMP INVERTER		
J4061	NPN			SCANNING LAMP	LAMP1	

FIGURE & KEY NO.	PARTS NUMBER	RANK	Q'TY	DESCRIPTION	SERIAL NUMBER/ REMARKS	SVC
J4100	SYS			ADF-S		
J4100	FK2-0247-000		1	CONNECTOR, FEMALE		
J4100	VS1-5452-007		1	CONNECTOR, 7P, FEMALE		
J4100	WS3-5596-000		3	PIN CONTACT, 18-24AWG		
J4101	VS1-5729-002		1	CONNECTOR, 2P, MALE		
J4101	VS3-5083-002		1	CONNECTOR, 2P, FEMALE		
J4101	WS3-5301-000		2	PIN CONTACT		
J4101	WS3-5160-000		2	SOCKET CONTACT, 18-24AWG		
J5501	PCB			DIFFERENTIAL		
J5501	VS1-6407-080		1	CONNECTOR, 80P, FEMALE		
J5502	PCB			DIFFERENTIAL		
J5502	FH2-6756-020		1	CABLE, DDI-S INTERFACE		
J5503	PCB			DIFFERENTIAL		
J5503	VS1-6302-003		2	CONNECTOR, 3P, FEMALE		
J5503	WS3-5569-000		4	PIN, CONTACT		
J5602	PCB			FUSE	100V	
J5602	VS3-5083-003		1	CONNECTOR, 3P, FEMALE	100V	
J5602	WS3-5160-000		2	SOCKET CONTACT, 18-24AWG	100V	
J9200	FH2-6856-000		1	HOUSING		
J9200	FH2-5821-000		1	CONNECTOR, 12P, MALE		
J9200	FH2-6855-000		1	CONNECTOR, 12P, FEMALE		
J9200	FH2-5825-000		5	PIN CONTACT, 16-20AWG		
J9200	WS3-5264-000		5	SOCKET CONTACT		
J9202	SYS			TO PRINTER		
J9202	FH2-6756-020		1	CABLE, DDI-S INTERFACE		

FIGURE B2
LIST OF ELECTRIC PARTS

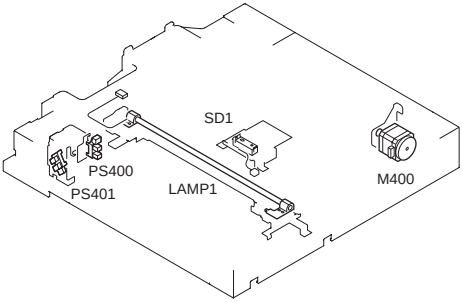

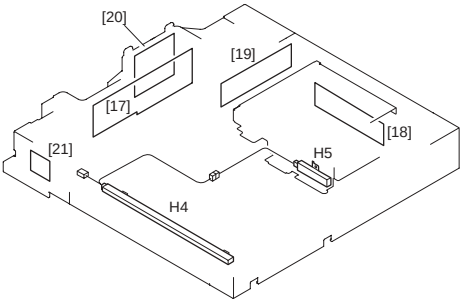

FIGURE & KEY NO.	PARTS NUMBER	RANK	Q'TY	DESCRIPTION	SERIAL NUMBER/ REMARKS	SVC
Fig.B2	NPN		RF	LIST OF ELECTRIC PARTS		
17	FG3-1681-000		1	READER CONTROLLER PCB ASSEMBLY		
18	FG6-7982-000		1	CCD UNIT		
19	FH3-7211-020		1	LAMP INVERTER PCB ASSEMBLY		
20	FG6-7978-000		1	DDIS PCB ASSEMBLY		
21	FG3-1682-000		1	FUSE PCB ASSEMBLY	100/220/240V	
H4	FH7-4665-020		1	HEATER, PLATE	100V	
H5	FH7-4666-020		1	HEATER, PLATE	100V	
LAMP1	FG6-6028-000		1	LAMP, XENON FLUORESCENT		
M400	FH6-1857-000		1	MOTOR,STEPPING		
PS400	FH7-7557-020		1	PHOTO-INTERRUPTER		

FIGURE & KEY NO.	PARTS NUMBER	RANK	Q'TY	DESCRIPTION	SERIAL NUMBER/ REMARKS	SVC
PS401	FH7-7557-020		1	PHOTO-INTERRUPTER		
SD1	FH7-7550-020		1	PAPER DETECT SENSOR UNIT		

iR2200i/2800i/3300i(Parts Catalog)

iR2220i

230V	**F14-4921-000**	**JAG00001-**
120V	**F14-4931-000**	**JAE00001-**
230V	**F14-4941-000**	**JAH00001-**
230V	**F14-4951-000**	**JAJ00001-**
230V	**F14-4961-000**	**JAK00001-**
230V	**F14-4971-000**	**JAL00001-**
230V	**F14-4981-000**	**JAM00001-**
230V	**F14-4991-000**	**UKN00001-**

iR2220N

230V	**F14-4922-000**	**JBD00001-**
120V	**F14-4932-000**	**JBB00001-**
230V	**F14-4952-000**	**JBH00001-**
230V	**F14-4972-000**	**JBK00001-**
230V	**F14-4982-000**	**JBL00001-**
230V	**F14-4992-000**	**JBP00001-**

iR2820i

220V	**F14-5080-000**	**JAZ00001-**

iR3320G

120V	**F14-5003-000**	**JDX00001-**

iR3320i

230V	**F14-5021-000**	**JAQ00001-**
120V	**F14-5031-000**	**MSV00001-**
230V	**F14-5041-000**	**JAR00001-**
230V	**F14-5051-000**	**JAS00001-**
220V	**F14-5060-000**	**JAX00001-**
230V	**F14-5061-000**	**JAT00001-**
220V	**F14-5070-000**	**JAW00001-**
230V	**F14-5071-000**	**JAU00001-**
230V	**F14-5081-000**	**JAV00001-**
230V	**F14-5091-000**	**QRG00001-**

iR3320N

230V	**F14-5023-000**	**JBR00001-**
120V	**F14-5033-000**	**MSW00001-**
230V	**F14-5053-000**	**JBS00001-**
230V	**F14-5073-000**	**JBU00001-**
230V	**F14-5083-000**	**JBY00001-**
230V	**F14-5093-000**	**JBZ00001-**

iR2200i

100V 50/60Hz	**F14-0115**	**MJD00001-**
220V 50Hz	**F14-0125**	**QSZ00001-**
220V 50Hz	**F14-0145**	**RSD00001-**
240V 50Hz	**F14-0155**	**QEV00001-**
240V 50Hz	**F14-0165**	**REU00001-**
220V 50Hz	**F14-0175**	**SDT00001-**
220V 50Hz	**F14-0185**	**TEG00001-**
220V 50Hz	**F14-0195**	**UJB00001-**

iR2800i

100V 50/60Hz	**F14-3415**	**MJF00001-**

iR3300i

100V 50/60Hz	**F14-0215**	**MJE00001-**
220V 50Hz	**F14-0225**	**RSC00001-**
120V 60Hz	**F14-0235**	**MQC00001-**
220V 50Hz	**F14-0245**	**RSE00001-**
240V 50Hz	**F14-0255**	**QEW00001-**
240V 50Hz	**F14-0265**	**REV00001-**
220V 50Hz	**F14-0275**	**SDU00001-**
220V 50Hz	**F14-0285**	**TEH00001-**
220V 50Hz	**F14-0295**	**UJC00001-**

Contents

A ASSEMBLY LOCATION DIAGRAM 3-1
100 EXTERNAL COVERS, PANELS, ETC. 3-4
101 MACHINE FRONT PLATE 3-8
102 INTERNAL COMPONENTS 1 3-10
103 INTERNAL COMPONENTS 2 3-12
104 INTERNAL COMPONENTS 3 3-15
105 INTERNAL COMPONENTS 4 3-17
106 INTERNAL COMPONENTS 5 3-19
107 MACHINE REAR PLATE 3-21
110 POWER CORD TERMINAL ASSEMBLY (100/120V) 3-24
111 POWER CORD TERMINAL ASSEMBLY(220/240V) 3-25
120 RIGHT DOOR ASSEMBLY 3-26
130 CONTROL PANEL ASSEMBLY 3-29
190 DEVELOPING FAN ASSEMBLY 3-31
191 MACHINE EXHAUST FAN ASSEMBLY 3-32
250 MAIN DRIVE ASSEMBLY 3-33
260 PAPER PICK-UP DRIVE ASSEMBLY 3-34
261 DUPLEXING DRIVE ASSEMBLY 3-36
280 FIXING FEEDER DRIVE ASSEMBLY 3-37
300 CASSETTE 3-38
310 PAPER PICK-UP MOUNT ASSEMBLY 3-41
315 MULTI FEEDER TRAY ASSEMBLY 3-46
320 REGISTRATION FRONT GUIDE ASSEMBLY 3-48
330 PAPER FEEDER ASSEMBLY 3-50
350 PAPER DELIVERY ASSEMBLY 3-53
351 LEFT VERTICAL PATH ASSEMBLY 3-55
360 DUPLEXING FEEDER ASSEMBLY 3-57
460 SCANNER ASSEMBLY 3-59
500 DRUM CARTRIDGE ASSEMBLY 3-60
640 DEVELOPING ASSEMBLY 3-61
810 FIXING ASSEMBLY 3-64
900 CONTROLLER BOX ASSEMBLY 3-67
910 HV POWER SUPPLY PCB ASSEMBLY 3-70
920 CONTROL PANEL INVERTER PCB ASSEMBLY 3-71
921 CONTROL PANEL CPU PCB ASSEMBLY 3-72
922 CONTROL PANEL PCB ASSEMBLY 3-73
930 DC CONTROLLER PCB ASSEMBLY 3-74
940 PAPER PICK-UP PCB ASSEMBLY 3-75
950 RESOLUTION CONVERSION PCB ASSEMBLY 3-76
B1 LIST OF CONNECTORS 3-77
B2 LIST OF MOTORS 3-95
B3 LIST OF FAN MOTORS 3-96
B4 LIST OF SENSORS 3-97
B5 LIST OF CLUTCHES, AND OTHERS 3-99
B6 LIST OF HEATERS, LAMPS, ETC. 3-100

B7 LIST OF PCBS.....3-102

FIGURE A
ASSEMBLY LOCATION DIAGRAM

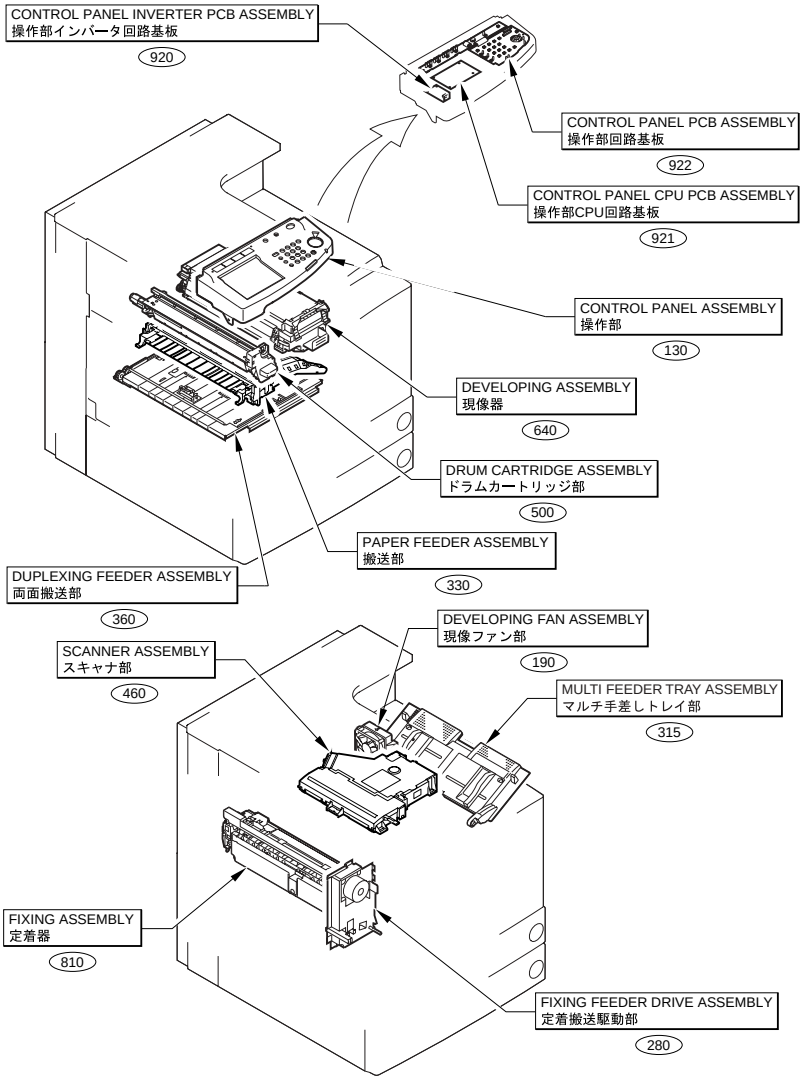

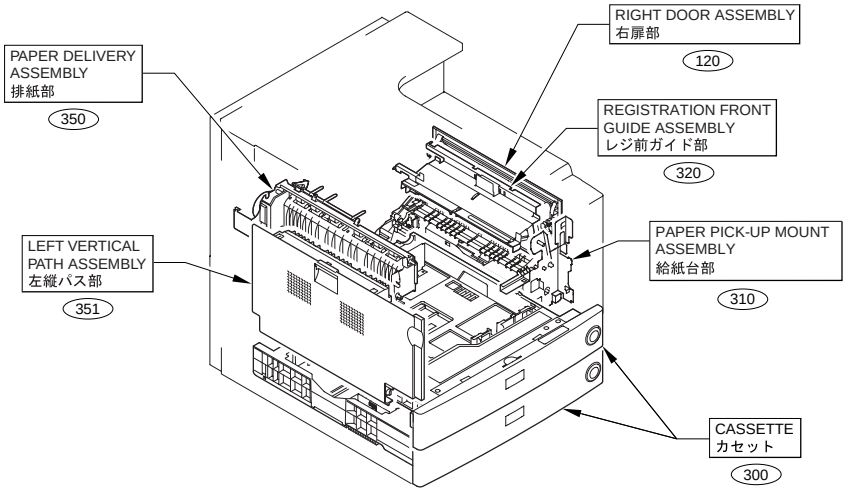
RIGHT DOOR ASSEMBLY
右扉部
120
PAPER DELIVERY
ASSEMBLY
排紙部
350
REGISTRATION FRONT
GUIDE ASSEMBLY
レジ前ガイド部
320
LEFT VERTICAL
PATH ASSEMBLY
左縦パス部
351
PAPER PICK-UP MOUNT
ASSEMBLY
給紙台部
310
CASSETTE
カセット
300

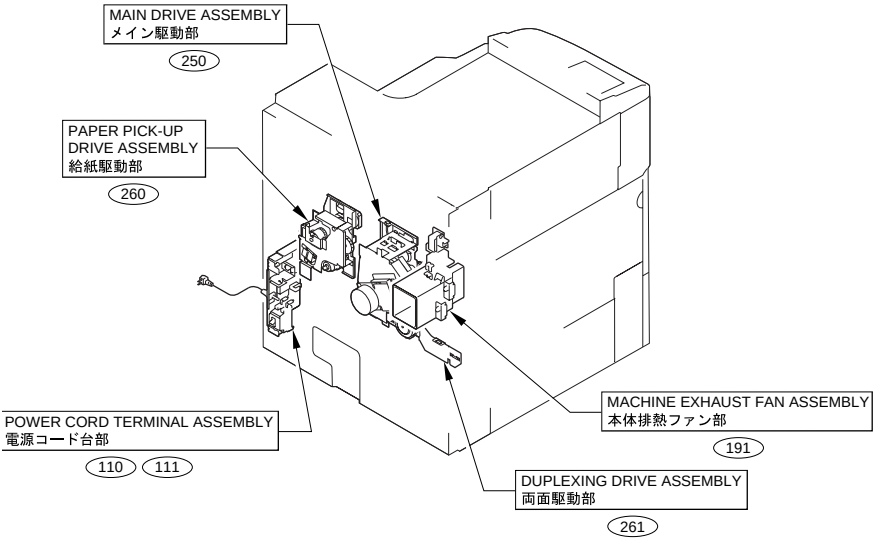
MAIN DRIVE ASSEMBLY
メイン駆動部
250
PAPER PICK-UP
DRIVE ASSEMBLY
給紙駆動部
260
POWER CORD TERMINAL ASSEMBLY
電源コード台部
110
111
MACHINE EXHAUST FAN ASSEMBLY
本体排熱ファン部
191
DUPLEXING DRIVE ASSEMBLY
両面駆動部
261

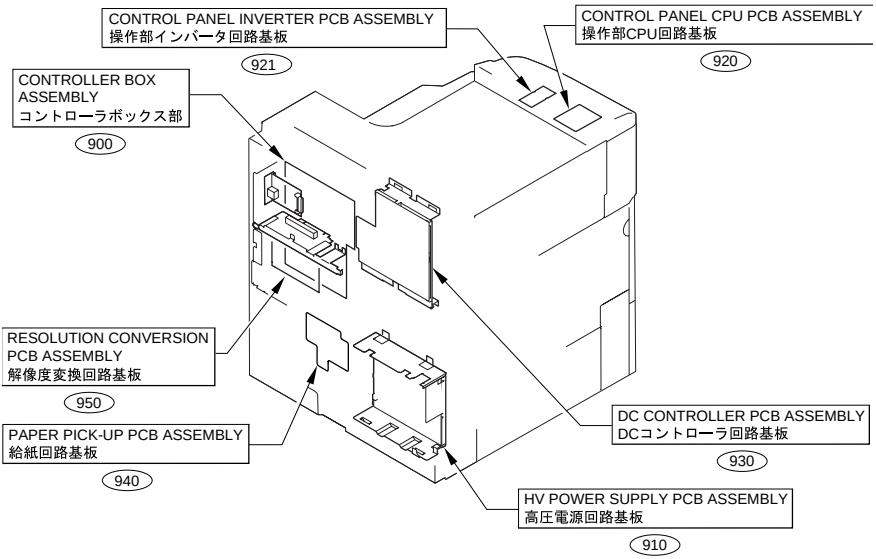
CONTROL PANEL INVERTER PCB ASSEMBLY
操作部インバータ回路基板
921
CONTROL PANEL CPU PCB ASSEMBLY
操作部CPU回路基板
920
CONTROLLER BOX
ASSEMBLY
コントローラボックス部
900
RESOLUTION CONVERSION
PCB ASSEMBLY
解像度変換回路基板
950
PAPER PICK-UP PCB ASSEMBLY
給紙回路基板
940
DC CONTROLLER PCB ASSEMBLY
DCコントローラ回路基板
930
HV POWER SUPPLY PCB ASSEMBLY
高圧電源回路基板
910

FIGURE 100
EXTERNAL COVERS, PANELS, ETC.

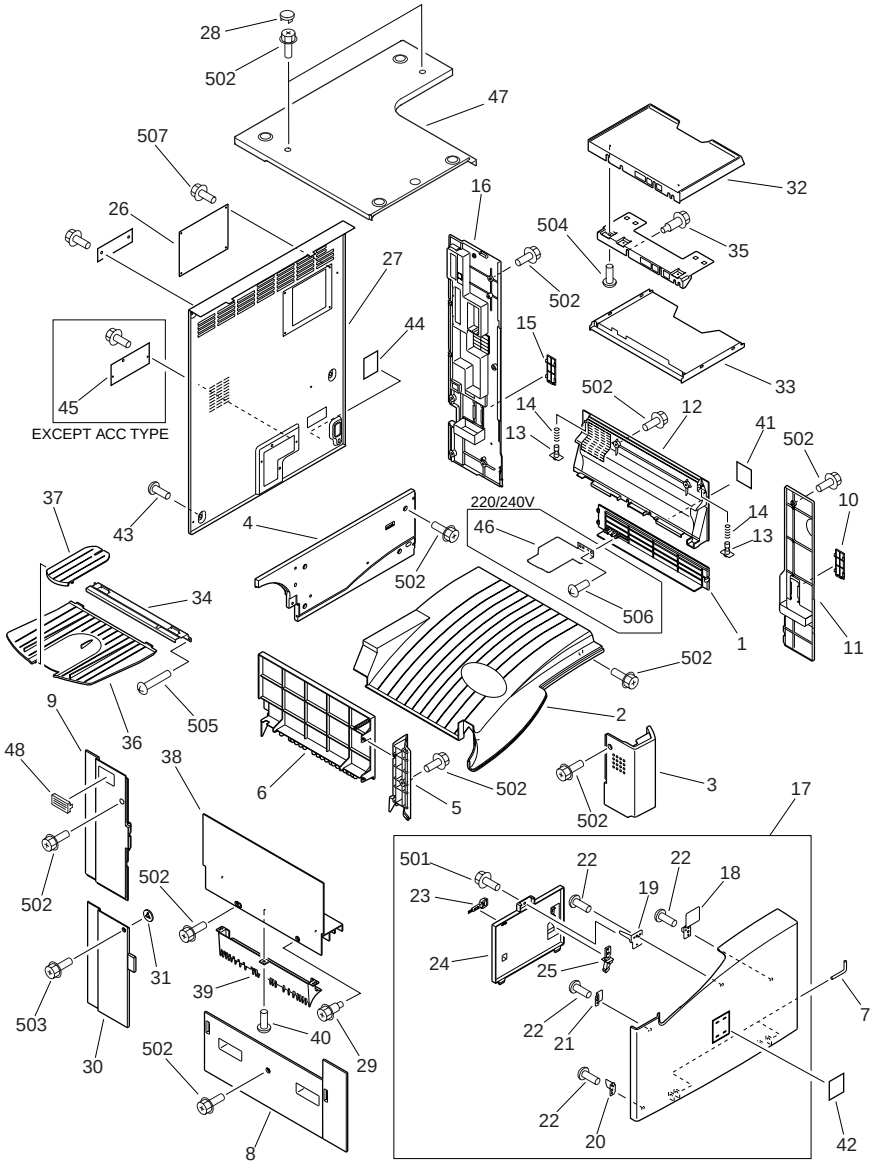

FIGURE & KEY NO.	PARTS NUMBER	RANK	Q'TY	DESCRIPTION	SERIAL NUMBER/ REMARKS	SVC
Fig.100	NPN		RF	EXTERNAL COVERS, PANELS, ETC		

FIGURE & KEY NO.	PARTS NUMBER	RANK	Q'TY	DESCRIPTION	SERIAL NUMBER/ REMARKS	SVC
1	FB5-4769-000		1	PANEL, RIGHT LOWER		
2	FB5-5055-000		1	PANEL, PRINTER, UPPER		
3	FB5-5058-000		1	PANEL, SUPPORT, LEFT		
4	FB5-5063-000		1	PANEL, INTERNAL, REAR		
5	FB5-5182-000		1	PANEL, LEFT SUPPORT, REAR		
6	FB5-5186-030		1	PANEL, PAPER DELIVERY		
7	FB3-2224-000		2	PIN, HINGE		
8	FB5-5266-020		1	LEFT PANEL, MIDDLE		
9	FB5-5267-000		1	LEFT PANEL, REAR		
10	FB5-4731-000		1	PLATE, BLANKING		
11	FB5-4741-030		1	RIGHT PANEL, FRONT		
12	FB5-4767-000		1	RIGHT PANEL, MIDDLE		
13	FB5-4772-000		2	LINK, TRAY		
14	FS7-2404-000		2	SPRING, COMPRESSION		
15	FB5-4731-000		1	PLATE, BLANKING		
16	FB5-4768-000		1	RIGHT PANEL, REAR		
17	FG6-5736-000		1	PANEL, FRONT		
18	FB5-5053-000		1	PLATE, SWITCH SHAFT PRESSURE		
19	FB5-5067-000		1	PLATE, SHUTTER LEVER PRESSURE		
20	FB5-5069-000		1	PLATE, INTERLOCK		
21	FB5-5070-000		1	PLATE, CATCH, LEFT		
22	XA9-0605-000		4	SCREW,P,M4X8		
23	FB4-5380-000		1	BRUSH, CLEANING		
24	FB5-5052-000		1	CASE, SERVICE		
25	FF6-0074-020		1	MIRROR CLEANING TOOL		
26	FB1-7157-020		1	COVER, BLANKING, REAR		
27	FB5-5061-000		1	PANEL, REAR		
28	FB6-2852-000		2	COVER, RUBBER		
29	FS5-9661-000		1	SCREW,STEPPED,RS,M4		
30	FB5-5057-000		1	PANEL, WASTE TONER		
31	XD9-0206-000		1	SPACER, SCREW RETAINER		
32	FB1-7737-000		1	TABLE, DOCUMENT, UPPER		

FIGURE & KEY NO.	PARTS NUMBER	RANK	Q'TY	DESCRIPTION	SERIAL NUMBER/ REMARKS	SVC
33	FB1-7738-000		1	TABLE, DOCUMENT, LOWER		
34	FB5-9806-00U		1	RECONDITIONED SUPPORT, TRAY		
35	XA9-1301-000		2	SCREW, RS STEPPED, M4		
36	FB4-5933-000		1	TRAY, DOCUMENT		
37	FB5-5143-000		1	TRAY, PAPER DELIVERY AUXILIARY		
38	FB5-4859-000		1	PANEL, PAPER DELIVERY		
39	FB5-4860-000		1	GUIDE, PAPER DELIVERY		
40	XA9-0605-000		3	SCREW,P,M4X8		
41	RS6-8382-000		1	LABEL, 'WARNING LASER'		
42	FB6-4433-000		1	EMBLEM		
42	FB6-4434-000		1	EMBLEM	IR2800I	
42	FB6-4435-000		1	EMBLEM	IR3300I	
42	FB6-4436-000		1	EMBLEM	IMAGE RUNNER 3300I	
42	FB6-5907-000		1	EMBLEM	IR2250I	
42	FB6-5908-000		1	EMBLEM	IR2850I	
42	FB6-5909-000		1	EMBLEM	IR3350I	
42	FB6-5910-000		1	EMBLEM	IMAGE RUNNER 2220I	
42	FB6-5911-000		1	EMBLEM	IMAGE RUNNER 3320I	
42	FB6-5912-000		1	EMBLEM	IR2220N	
42	FB6-5913-000		1	EMBLEM	IMAGE RUNNER 3320N	
42	FB6-5914-000		1	EMBLEM	IR2220I	
42	FB6-5915-000		1	EMBLEM	IR2820I	
42	FB6-5916-000		1	EMBLEM	IR3320I	
42	FB6-5918-000		1	EMBLEM	IR3320N	
42	FB6-5927-000		1	EMBLEM	IMAGE RUNNER 3320G	
43	XA9-0266-000		7	SCREW,W/WASHER,M4X8		
44	RS6-8382-000		1	LABEL, 'WARNING LASER'		
45	FB5-5068-000		1	PLATE, BLANKING	EXCEPT ACC TYPE	
46	FB3-2381-000		1	COVER, PAPER PICK-UP, LOWER	220/240V	
47	FB5-5066-000		1	PANEL, UPPER		
48	FH2-5824-000		1	COVER, CONNECTOR, 1		
501	XB3-6400-805		1	SCREW,RS,M4X8		

FIGURE & KEY NO.	PARTS NUMBER	RANK	Q'TY	DESCRIPTION	SERIAL NUMBER/ REMARKS	SVC
502	XB3-6400-800		AR	SCREW,RS,M4X8		
503	XB3-6400-800		1	SCREW,RS,M4X8		
504	XB4-7300-609		2	SCREW,TAPPING,TRUSS HEAD,M3X6		
505	XB6-7401-206		2	SCREW,TP,M4X12		
506	XB4-7400-809		2	SCREW,TAPPING,TRUSS HEAD,M4X8	220/240V	
507	XB3-6400-800		7	SCREW,RS,M4X8		

FIGURE 101
MACHINE FRONT PLATE

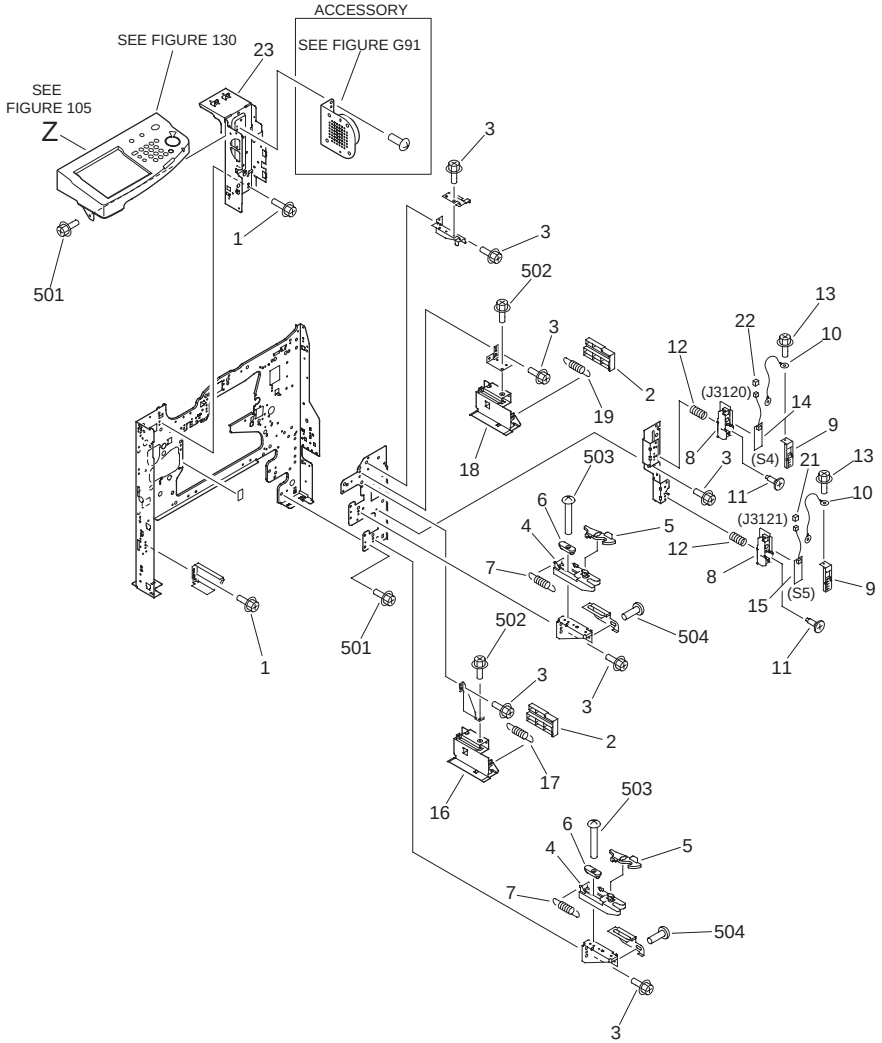

FIGURE & KEY NO.	PARTS NUMBER	RANK	Q'TY	DESCRIPTION	SERIAL NUMBER/ REMARKS	SVC
Fig.101	NPN		RF	MACHINE FRONT PLATE		
1	XA9-0721-010		1	SCREW,RS,M4X10		
2	FB5-3928-000		2	COVER, RIGHT RAIL		
3	XA9-0626-000		9	SCREW,RS,M3X6		

FIGURE & KEY NO.	PARTS NUMBER	RANK	Q'TY	DESCRIPTION	SERIAL NUMBER/ REMARKS	SVC
4	FB3-2937-000		2	BLOCK, CASSETTE STOP		
5	FB5-1471-000		2	LEVER, CLICK		
6	FB5-4762-000		2	GUIDE, CASSETTE CLICK		
7	FS7-2287-000		2	SPRING, TENSION		
8	FB3-2947-000		2	HOLDER, PCB		
9	FF6-0112-000		2	COVER, SIZE SENSOR PCB		
10	FF3-1171-000		2	CABLE, GROUNDING		
11	FS5-9397-000		2	SCREW,STEPPED,M4		
12	FS6-2311-000		2	SPRING, COMPRESSION		
13	XA9-0626-000		4	SCREW,RS,M3X6		
14	FG3-1617-000		1	UPPER CASSETTE SIZE PCB ASS'Y	S4 J3120	
15	FG3-1618-000		1	LOWER CASSETTE SIZE PCB ASS'Y	S5 J3121	
16	FF6-0087-000		1	RAIL, RIGHT, LOWER		
17	FS7-2288-000		1	SPRING, TENSION		
18	FF6-0096-000		1	RAIL, RIGHT, UPPER		
19	FS7-2288-000		1	SPRING, TENSION		
21	VS1-7440-006		1	CONNECTOR, SNAP TIGHT	J3121	
22	VS1-7177-007		1	CONNECTOR, SNAP TIGHT	J3120	
23	FB5-5163-000		1	PILLAR, FRONT SIDE, LEFT		
501	XB3-6400-800		AR	SCREW,RS,M4X8		
502	XB3-6400-805		2	SCREW,RS,M4X8		
503	XB1-2301-009		2	SCREW,MACH.,TRUSS HEAD,M3X10		
504	XB6-7400-609		2	SCREW,TP,M4X6		

FIGURE 102
INTERNAL COMPONENTS 1

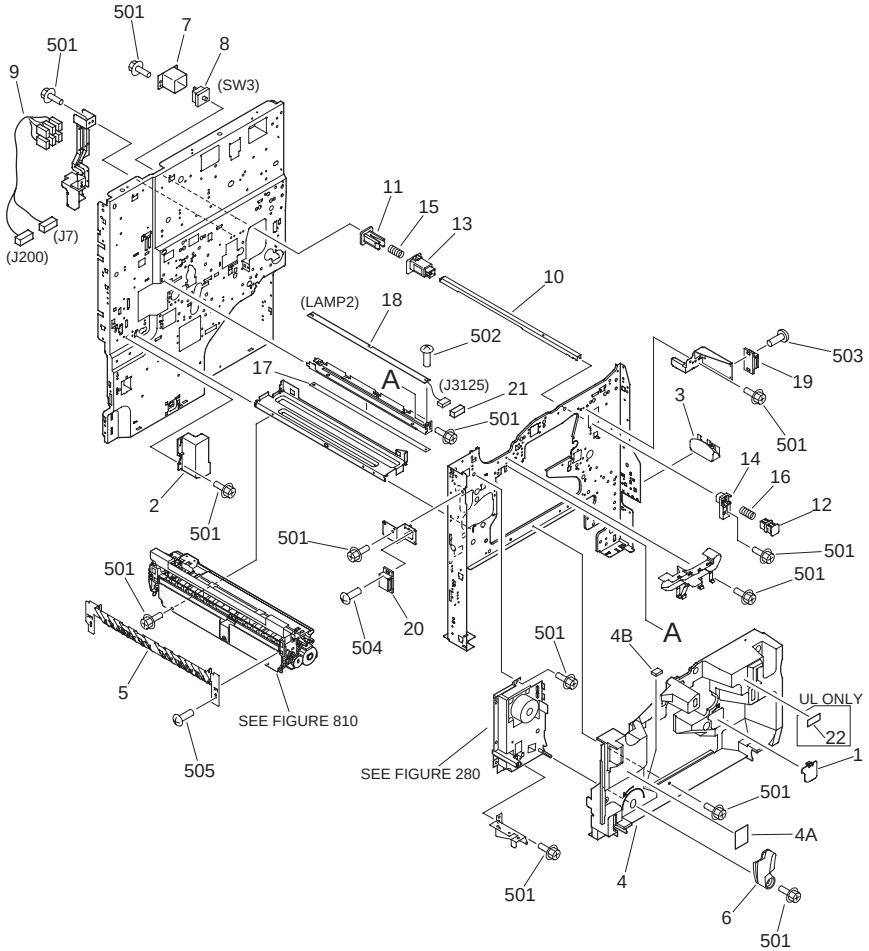

FIGURE & KEY NO.	PARTS NUMBER	RANK	Q'TY	DESCRIPTION	SERIAL NUMBER/ REMARKS	SVC
Fig.102	NPN		RF	INTERNAL COMPONENTS 1		
1	FB5-5144-000		1	COVER, AUXILIARY		
2	FB5-5155-000		1	COVER, FIXING CONNECTOR		
3	FB5-5185-000		1	HANDLE, RIGHT FRONT		
4	FF6-0107-000		1	COVER, INTERNAL		
4A	FB5-0281-000		1	LABEL, 'CAUTION LASER'		

FIGURE & KEY NO.	PARTS NUMBER	RANK	Q'TY	DESCRIPTION	SERIAL NUMBER/ REMARKS	SVC
4B	FB5-4839-000		1	DAMPER, PAPER FEED		
5	FF6-0138-000		1	GUIDE, PAPER DELIVERY		
6	FG6-0561-000		1	FEEDER ENGAGEMENT HANDLE UNIT		
7	FB4-3061-000		1	MOUNT, DOOR SWITCH		
8	WC8-5178-000		1	SWITCH, INTERLOCK	SW3	
9	FG3-1602-000		1	CABLE, DOOR SWITCH, AC	J7,200	
10	FB4-3062-000		1	SHAFT, DOOR SWITCH		
11	FB4-3063-000		1	BLOCK, SWITCH PRESSURE		
12	FB4-3064-000		1	BLOCK, SHAFT PRESSURE		
13	FB4-3065-000		1	HOLDER, DOOR SWITCH, REAR		
14	FB4-3066-000		1	HOLDER, DOOR SWITCH, FRONT		
15	FS6-2784-000		1	SPRING, COMPRESSION		
16	FS7-2411-000		1	SPRING, COMPRESSION		
17	FB3-2765-000		1	FILTER, PRECONDITION. EXPOSURE		
18	FG5-6297-000		1	PRECONDITIONING LAMP PCB UNIT	LAMP2 J3125	
19	XZ9-0527-000		1	MAGNET CATCH		
20	XZ9-0526-000		1	MAGNET CATCH		
21	VS1-7177-002		1	CONNECTOR, SNAP TIGHT	J3125	
22	FS6-8992-000		1	LABEL,	UL ONLY	
501	XB3-6400-800		AR	SCREW,RS,M4X8		
502	XB1-2300-609		1	SCREW,MACH.,TRUSS HEAD,M3X6		
503	XB2-8300-807		2	SCREW,W/WASHER,M3X8		
504	XB2-8300-807		2	SCREW,W/WASHER,M3X8		
505	XB6-7300-605		1	SCREW,TP,M3X6		

FIGURE 103
INTERNAL COMPONENTS 2

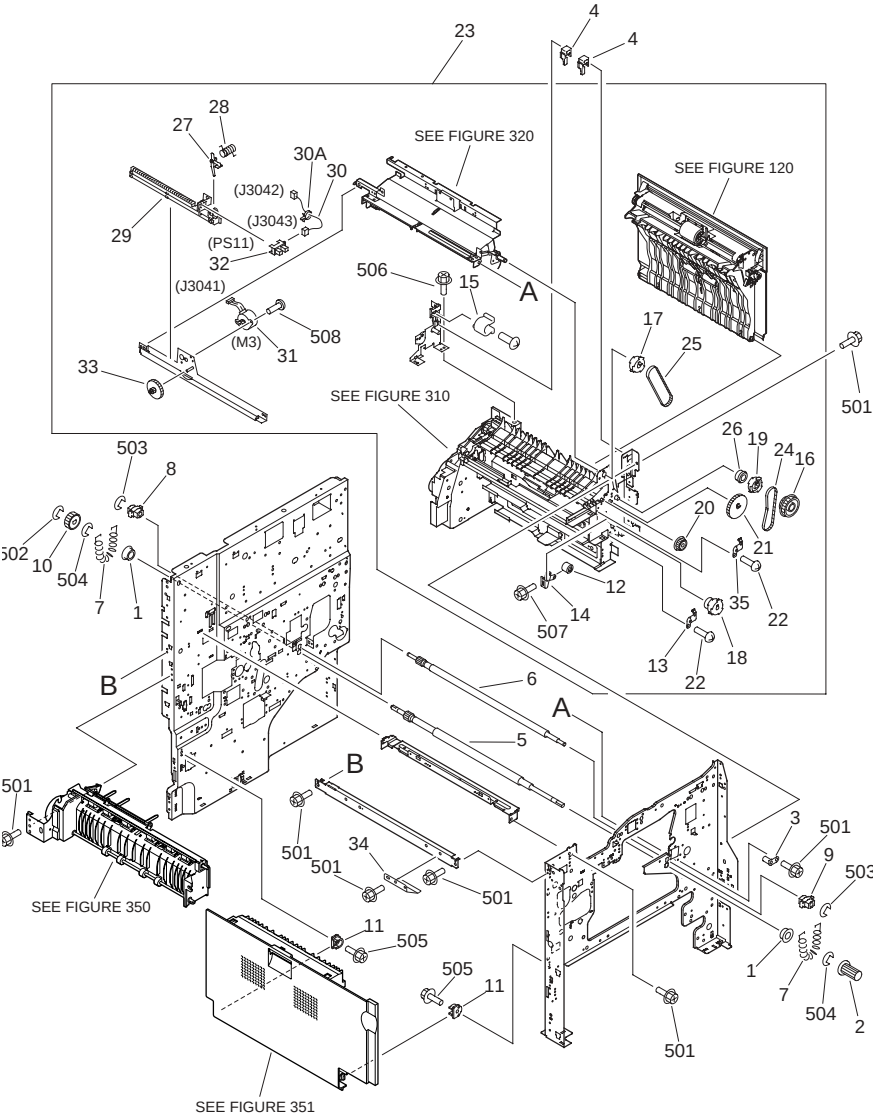

FIGURE & KEY NO.	PARTS NUMBER	RANK	Q'TY	DESCRIPTION	SERIAL NUMBER/ REMARKS	SVC
Fig.103	NPN		RF	INTERNAL COMPONENTS 2		
1	FA1-0056-000		2	BUSHING		

FIGURE & KEY NO.	PARTS NUMBER	RANK	Q'TY	DESCRIPTION	SERIAL NUMBER/ REMARKS	SVC
2	FB1-7214-000		1	KNOB		
3	FB3-2214-000		1	PIN, POSITIONING		
4	FB3-2829-000		2	BLOCK, MULTI FEED TRAY, STOP		
5	FF6-0086-000		1	ROLLER, REGISTRATION, LOWER		
6	FF6-0097-000		1	ROLLER, REGISTRATION, UPPER		
7	FS2-2783-000		2	SPRING, TENSION		
8	FS5-1261-000		1	BUSHING, REGISTRATION, UPPER		
9	FS5-1944-000		1	BUSHING		
10	FS7-0738-000		1	GEAR, 29T		
11	FB5-5175-000		2	BUSHING, LEFT VERTICAL PATH		
12	FB5-4726-000		1	ROLLER, BELT ADJUSTING		
13	FB5-4727-000		1	SPRING, LEAF, GROUNDING		
14	FB5-5289-000		1	HOLDER, ROLLER		
15	FS5-1589-000		1	BUSHING		
16	FS5-3821-000		1	PULLEY, 40T/GEAR, 16T		
17	FS5-3822-000		1	PULLEY, 40T		
18	FS5-3823-000		1	PULLEY, 40T		
19	FS5-3831-000		1	PULLEY, 40T		
20	FS6-0572-000		1	GEAR, 16T		
21	FS7-0760-000		1	GEAR, 38T		
22	XA9-0591-000		2	SCREW,M3X8		
23	FG6-5644-130		1	PAPER PICK-UP ASSEMBLY		
24	XF2-3110-840		1	BELT, TIMING		
25	XF2-3113-140		1	BELT, TIMING		
26	XG9-0250-000		1	BEARING, BALL		
27	FB5-9801-000		1	LINK, SIDE REGISTRATION		
28	FB3-2996-000		1	SPRING, TORSION		
29	FB5-4720-000		1	BLOCK, SIDE REGIST. SENSOR		
30	FF3-4174-000		1	CABLE, SIDE REGIST. SENSOR	J3042,3043	
30A	WT2-5565-000		1	CLAMP, CABLE		
31	FK2-0144-000		1	MOTOR, STEPPING, DC24V	M3 J3041	
32	FK2-0149-000		1	PHOTO-INTERRUPTER	PS11 J3043	

FIGURE & KEY NO.	PARTS NUMBER	RANK	Q'TY	DESCRIPTION	SERIAL NUMBER/ REMARKS	SVC
33	FS7-0750-00U		1	GEAR, 56T/14T, RECONDITIONED		
34	FB5-9789-000		1	SPRING, LEAF		
35	FB5-9809-000		1	SPRING, LEAF		
501	XB3-6400-800		AR	SCREW,RS,M4X8		
502	XD2-1100-402		1	RING,E		
503	XD2-1100-502		2	RING,E		
504	XD2-1100-642		2	RING,E		
505	XB3-7400-809		2	SCREW,RS TOOTHED LOCK,M4X8		
506	XB3-6300-609		1	SCREW,RS,M3X6		
507	XB3-6300-805		11	SCREW,RS,M3X8		
508	XB1-2300-609		2	SCREW,MACH.,TRUSS HEAD,M3X6		

FIGURE 104
INTERNAL COMPONENTS 3

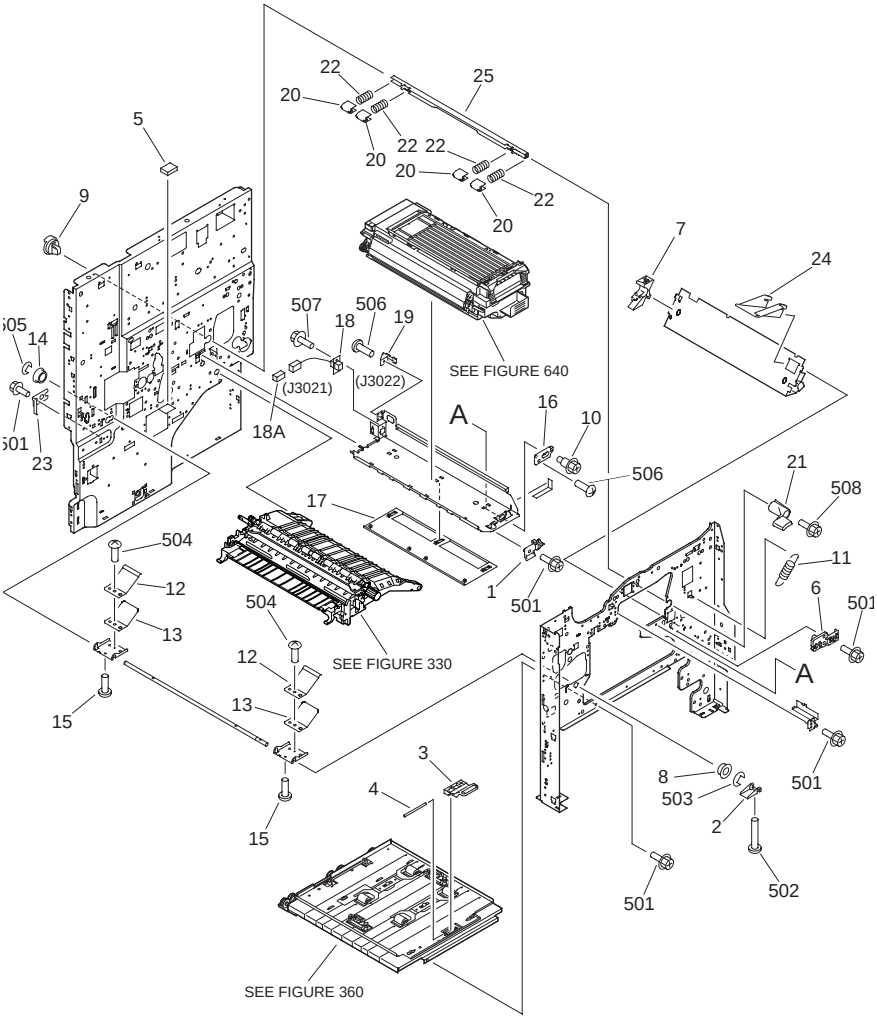

FIGURE & KEY NO.	PARTS NUMBER	RANK	Q'TY	DESCRIPTION	SERIAL NUMBER/ REMARKS	SVC
Fig.104	NPN		RF	INTERNAL COMPONENTS 3		
1	FB3-2206-000		1	PLATE, STOP DEVELOPING		
2	FB5-4819-000		1	ARM, PRESSURE PLATE		
3	FB4-2943-000		1	HANDLE, PAPER FEEDER		
4	FB4-2944-000		1	SHAFT, HANDLE		

FIGURE & KEY NO.	PARTS NUMBER	RANK	Q'TY	DESCRIPTION	SERIAL NUMBER/ REMARKS	SVC
5	FB5-4839-000		1	DAMPER, PAPER FEED		
6	FB5-5160-000		1	PIN, HINGE, PAPER FEEDER		
7	FB5-5192-000		1	GUIDE, PAPER FEEDER HINGE		
8	FS1-1189-000		1	BUSHING		
9	FS2-1431-000		1	BUSHING		
10	FS5-9210-020		1	SCREW,STEPPED,M4		
11	FS7-2386-000		1	SPRING, TENSION		
12	FB5-4816-000		2	PLATE, PRESSURE, BIG		
13	FB5-4817-000		2	PLATE, PRESSURE, SMALL		
14	FS1-1189-000		1	BUSHING		
15	XA9-0700-000		2	SCREW,TP,M4X8		
16	FB5-4976-000		1	SPACER, DEVELOPING RAIL SLIDE		
17	FB5-4979-000		1	SHIELD, RAIL, UPPER		
18	FF3-1136-000		1	CABLE, TONNER SENSOR	J3021,3022	
18A	VS1-7177-003		1	CONNECTOR, SNAP TIGHT	J3021	
19	FF5-1458-020		1	MOUNT, ELECTRODE		
20	FB2-3900-030		4	CAM, PRESSURE APPLICATION		
21	FB4-5382-020		1	HANDLE, DEVELOPING PRESSURE		
22	FS7-2387-000		4	SPRING, COMPRESSION		
23	FB5-5265-000		1	PLATE, GROUNDING		
24	FB5-9567-000		1	HOLDER, PAPER DUST		
25	FB5-4975-000		1	SHAFT, PRESSURE		
501	XB3-6400-800		AR	SCREW,RS,M4X8		
502	XB6-7501-007		3	SCREW,TP,M5X10		
503	XD2-1100-642		1	RING,E		
504	XB6-7400-609		2	SCREW,TP,M4X6		
505	XD2-1100-642		1	RING,E		
506	XB1-2300-409		2	SCREW,MACH.,TRUSS HEAD,M3X4		
507	XB3-6300-805		2	SCREW,RS,M3X8		
508	XB3-6400-800		1	SCREW,RS,M4X8		
	FB5-4815-000		1	SHAFT,PRESSURE,FEEDER ASSEMBLY		

FIGURE 105
INTERNAL COMPONENTS 4

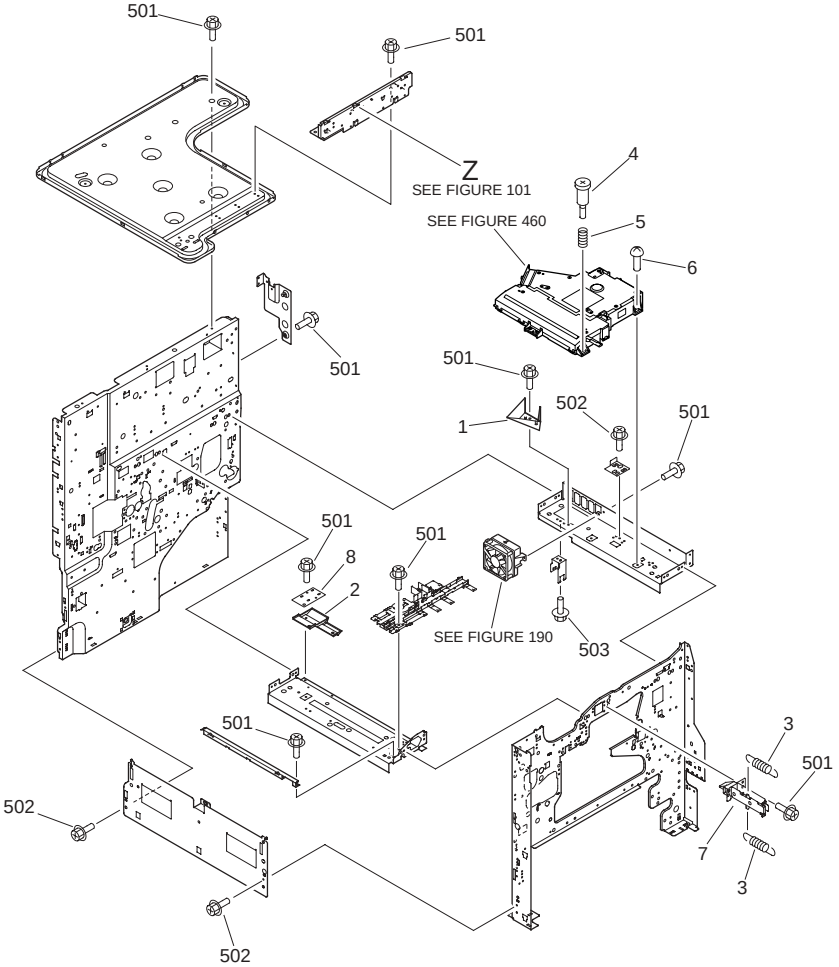

FIGURE & KEY NO.	PARTS NUMBER	RANK	Q'TY	DESCRIPTION	SERIAL NUMBER/ REMARKS	SVC
Fig.105	NPN		RF	INTERNAL COMPONENTS 4		
1	FB5-5159-000		1	DUCT, LASER SCANNER		
2	FB5-5173-000		1	DUCT, CARTRIDGE		
3	FS7-2380-000		2	SPRING, TENSION		
4	FS5-9663-000		2	SCREW,STEPPED,M4		
5	FS7-2410-000		2	SPRING, COMPRESSION		

FIGURE & KEY NO.	PARTS NUMBER	RANK	Q'TY	DESCRIPTION	SERIAL NUMBER/ REMARKS	SVC
6	XA9-1289-000		2	SCREW,W/WASHER,M4X10		
7	FF6-0245-000		1	LASER SHUTTER LEVER UNIT		
8	FB5-4820-000		1	SHIELD, LASER CABLE		
501	XB3-6400-800		AR	SCREW,RS,M4X8		
502	XB3-6400-800		4	SCREW,RS,M4X8		
503	XB3-6400-800		1	SCREW,RS,M4X8		

FIGURE 106
INTERNAL COMPONENTS 5

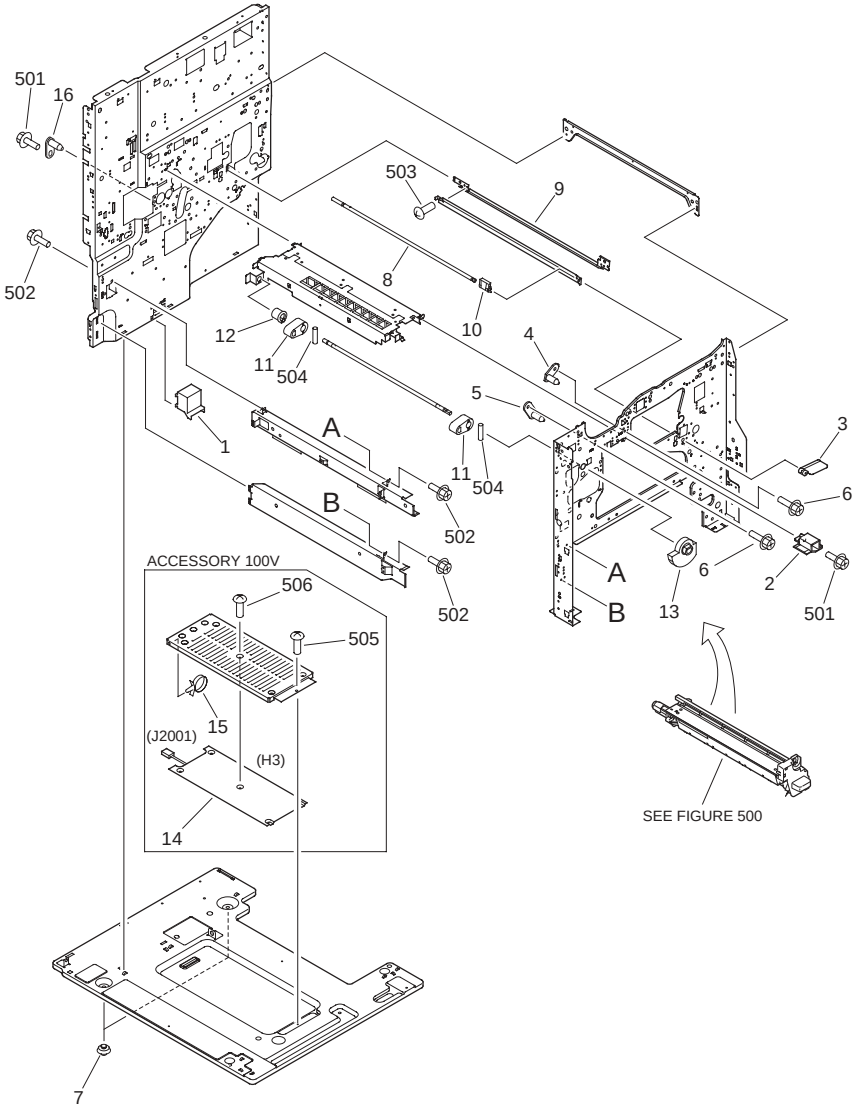

FIGURE & KEY NO.	PARTS NUMBER	RANK	Q'TY	DESCRIPTION	SERIAL NUMBER/ REMARKS	SVC
Fig.106	NPN		RF	INTERNAL COMPONENTS 5		
1	FB3-3192-020		1	COVER, HEATER CONNECTOR		

FIGURE & KEY NO.	PARTS NUMBER	RANK	Q'TY	DESCRIPTION	SERIAL NUMBER/ REMARKS	SVC
2	FB5-5059-000		1	GUIDE, CARTRIDGE		
3	FB5-9252-000		1	HANDLE, PAPER DUST CLEANING		
4	FF6-0247-000		1	PIN, POSITIONING		
5	FF6-0111-000		1	PIN, POSITIONING		
6	XA9-0721-010		1	SCREW,RS,M4X10		
7	XH9-0125-000		2	FOOT, RUBBER		
8	FB5-9249-000		1	ROD, TENSION		
9	FF6-0092-00U		1	RECONDITIONED PLATE, CLEANING		
10	FF6-0102-00U		1	RECONDITIONED PAD CLEANING		
11	FB6-2770-000		2	CAM, PRESSURE RELEASE		
12	FS5-1953-000		1	BUSHING		
13	FS7-0707-000		1	GEAR, 22T		
14	FH7-4576-000		1	HEATER, CASSETTE	ACCESSORY 100VH3 J2001	
15	WT2-5041-000		1	TIE, CABLE	ACCESSORY 100V	
16	FF6-0243-000		1	PIN, POSITIONING		
501	XB3-6400-800		AR	SCREW,RS,M4X8		
502	XB3-6400-800		12	SCREW,RS,M4X8		
503	XB1-2300-409		2	SCREW,MACH.,TRUSS HEAD,M3X4		
504	XD3-2200-122		2	PIN,DOWEL		
505	XB1-2400-606		1	SCREW,MACH.,TRUSS HEAD,M4X6	ACCESSORY 100V	
506	XB1-2400-409		5	SCREW,MACH.,TRUSS HEAD,M4X4	ACCESSORY 100V	

FIGURE 107
MACHINE REAR PLATE

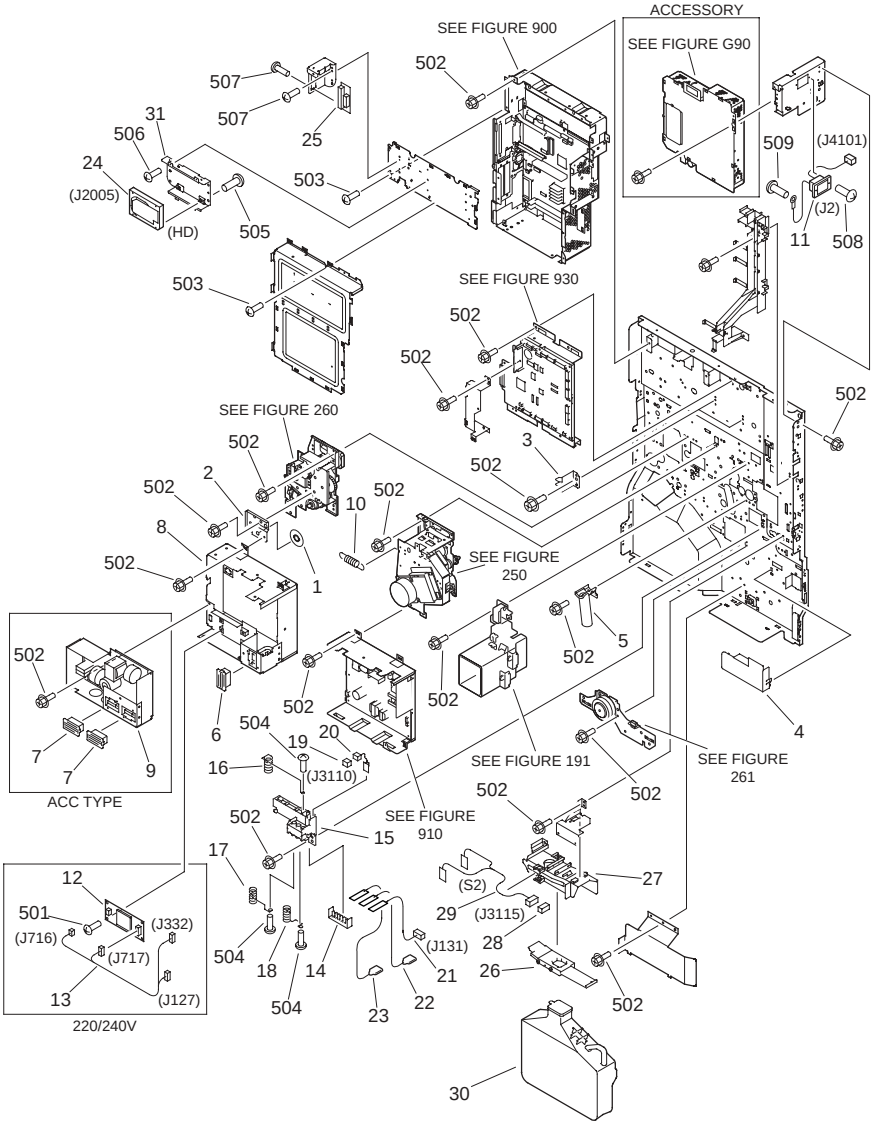

FIGURE & KEY NO.	PARTS NUMBER	RANK	Q'TY	DESCRIPTION	SERIAL NUMBER/ REMARKS	SVC
Fig.107	NPN		RF	MACHINE REAR PLATE		
1	FB5-5032-000		1	FLANGE, BELT, 2		

FIGURE & KEY NO.	PARTS NUMBER	RANK	Q'TY	DESCRIPTION	SERIAL NUMBER/ REMARKS	SVC
2	FB5-5048-000		1	COVER, PICK-UP DRIVE SHAFT		
3	FB5-5098-000		2	PLATE, GROUNDING		
4	FB5-5264-000		1	COVER, CONNECTOR		
5	FF6-0244-000		1	JOINT, PIPE		
6	FH2-6552-000		1	COVER, CONNECTOR		
7	FH2-6552-000		2	COVER, CONNECTOR	ACC TYPE	
8	FH3-2613-020		1	SWITCHING REGULATOR PCB ASS'Y	100/120V	
8	FH3-2614-020		1	SWITCHING REGULATOR PCB ASS'Y	220/240V	
9	FH3-2615-000		1	SWITCHING REGULATOR PCB ASS'Y	100/120V ACC TYPE	
9	FH3-2616-020		1	SWITCHING REGULATOR PCB ASS'Y	220/240V ACC TYPE	
10	FS7-2385-000		1	SPRING, TENSION		
11	FG3-1995-00U		1	RECONDITIONED CABLE	J2,4101	
12	FG3-1608-000		1	THERMISTOR PCB ASSEMBLY	220/240V	
13	FG3-1616-000		1	CABLE, THERMISTOR POWER SUPPLY	220/ 240VJ127,332,716,717	
14	FB3-2596-000		1	SUPPORT, CORD		
15	FB5-4826-000		1	CONNECTOR, HV TRANSFER		
16	FB5-4827-000		1	SPRING UNIT, CONTACT		
17	FB5-4828-000		1	SPRING UNIT, CONTACT		
18	FB5-4829-000		1	SPRING UNIT, CONTACT		
19	VS1-7177-002		1	CONNECTOR, SNAP TIGHT	J3110	
20	FG3-0133-000		1	DRUM SENSOR UNIT		
21	FG3-1624-000		1	CABLE, TRANSFER GUIDE, HV	J131	
22	FG3-1625-000		1	CABLE, TRANSFER, HV		
23	FG3-1626-000		1	CABLE, STATIC ELIMINATOR, HV		
24	WM2-5235-000		1	HDD MHV2040AH 20		
25	FG3-1744-020		1	CENTRO PCB ASSEMBLY		
26	FB5-5014-000		1	LID, SLIDE		
27	FF6-0166-000		1	RAIL, WASTE TONER SENSOR		
28	VS1-7177-004		1	CONNECTOR, SNAP TIGHT	J3115	
29	FM5-5153-000		1	WASTE TONER SENSOR PCB ASS'Y	S2 J3115	
30	FG6-5815-000		1	BOTTLE, WASTE TONER		

FIGURE & KEY NO.	PARTS NUMBER	RANK	Q'TY	DESCRIPTION	SERIAL NUMBER/ REMARKS	SVC
31	FB5-5108-000		1	MOUNT, HD SUPPORT		
501	XB1-2300-607		4	SCREW,MACH.,TRUSS HEAD,M3X6	220/240V	
502	XB3-6400-800		AR	SCREW,RS,M4X8		
503	XB6-7400-807		31	SCREW,TP,M4X8		
504	XB1-2300-407		3	SCREW,MACH.,TRUSS HEAD,M3X4		
505	XB6-7300-407		4	SCREW,TP,M3X4		
506	XB6-7400-807		4	SCREW,TP,M4X8		
507	XB1-2300-607		4	SCREW,MACH.,TRUSS HEAD,M3X6		
508	XB1-2300-609		2	SCREW,MACH.,TRUSS HEAD,M3X6		
509	XB2-7400-607		1	SCREW,W/WASHER,M4X6		

FIGURE 110
POWER CORD TERMINAL ASSEMBLY (100/120V)

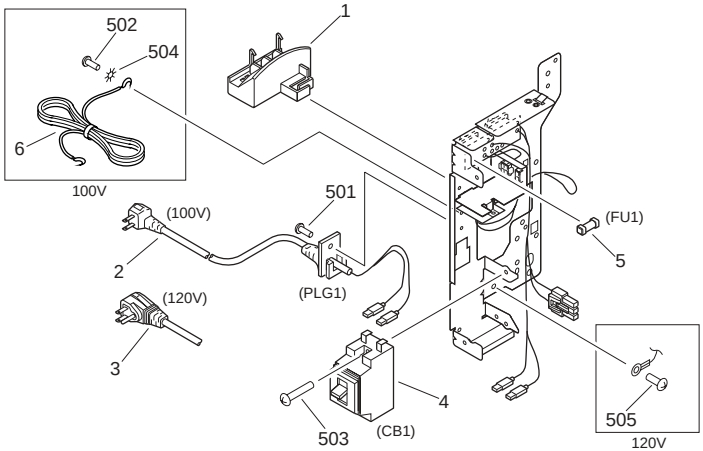

NOTE : This assembly does not include the part shown with key No. 6.

注：このユニットにKey No. 6の部品は含まれません。

FIGURE & KEY NO.	PARTS NUMBER	RANK	Q'TY	DESCRIPTION	SERIAL NUMBER/ REMARKS	SVC
Fig.110	FG6-5777-000		1	POWER CORD TERMINAL ASSEMBLY	100V	
Fig.110	FG6-5781-000		1	POWER CORD TERMINAL ASSEMBLY	120V	
1	FB5-5193-000		1	HANDLE, RIGHT REAR		
2	FF3-4192-000		1	CORD, POWER	100V PLG1	
3	FF3-4193-000		1	CORD, POWER	120V PLG1	
4	FH7-7626-000		1	BREAKER, CIRCUIT	CB1	
5	VD7-0211-001		1	FUSE	FU1	
6	FH2-5006-000		1	CABLE, GROUNDING	100V SEE NOTE	
501	XB1-2300-609		1	SCREW,MACH.,TRUSS HEAD,M3X6		
502	XB1-2400-803		1	SCREW,MACH.,TRUSS HEAD,M4X8	100V	
503	XB1-2402-009		2	SCREW,MACH.,TRUSS HEAD,M4X20		
504	XD1-4200-402		1	WASHER,TOOTHED LOCK	100V	
505	XB2-7400-607		1	SCREW,W/WASHER,M4X6	120V	

FIGURE 111
POWER CORD TERMINAL ASSEMBLY(220/240V)

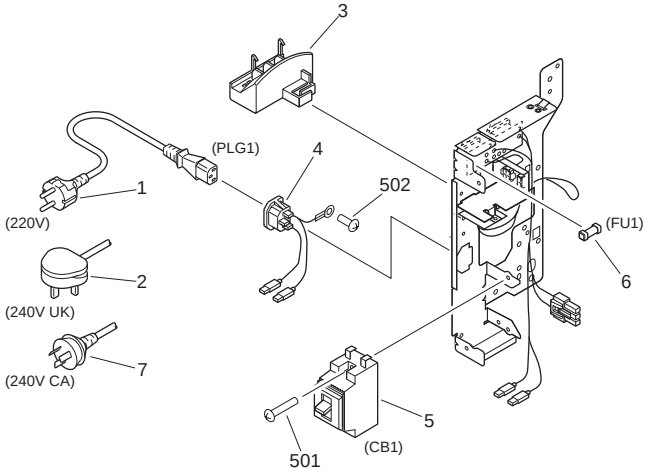

NOTE : This assembly does not include the parts shown with key No. 1, 2, and 7.

注：このユニットにKey No. 1, 2, 7の部品は含まれません。

FIGURE & KEY NO.	PARTS NUMBER	RANK	Q'TY	DESCRIPTION	SERIAL NUMBER/ REMARKS	SVC
Fig.111	FG6-5782-000		1	POWER CORD TERMINAL ASSEMBLY	220/240V	
1	FH2-7080-000		1	POWER CORD	220V PLG1SEE NOTE	
2	FH2-7081-000		1	POWER CORD	240V UK PLG1SEE NOTE	
3	FB5-5193-000		1	HANDLE, RIGHT REAR		
4	FF3-4194-000		1	CABLE, AC SOCKET		
5	FH7-7625-030		1	BREAKER, CIRCUIT	CB1	
6	VD7-0641-001		1	FUSE, 1A, 250V	FU1	
7	FH2-7082-000		1	POWER CORD	240V CA PLG1SEE NOTE	
501	XB1-2402-009		2	SCREW,MACH.,TRUSS HEAD,M4X20		
502	XB2-7400-607		1	SCREW,W/WASHER,M4X6		

FIGURE 120
RIGHT DOOR ASSEMBLY

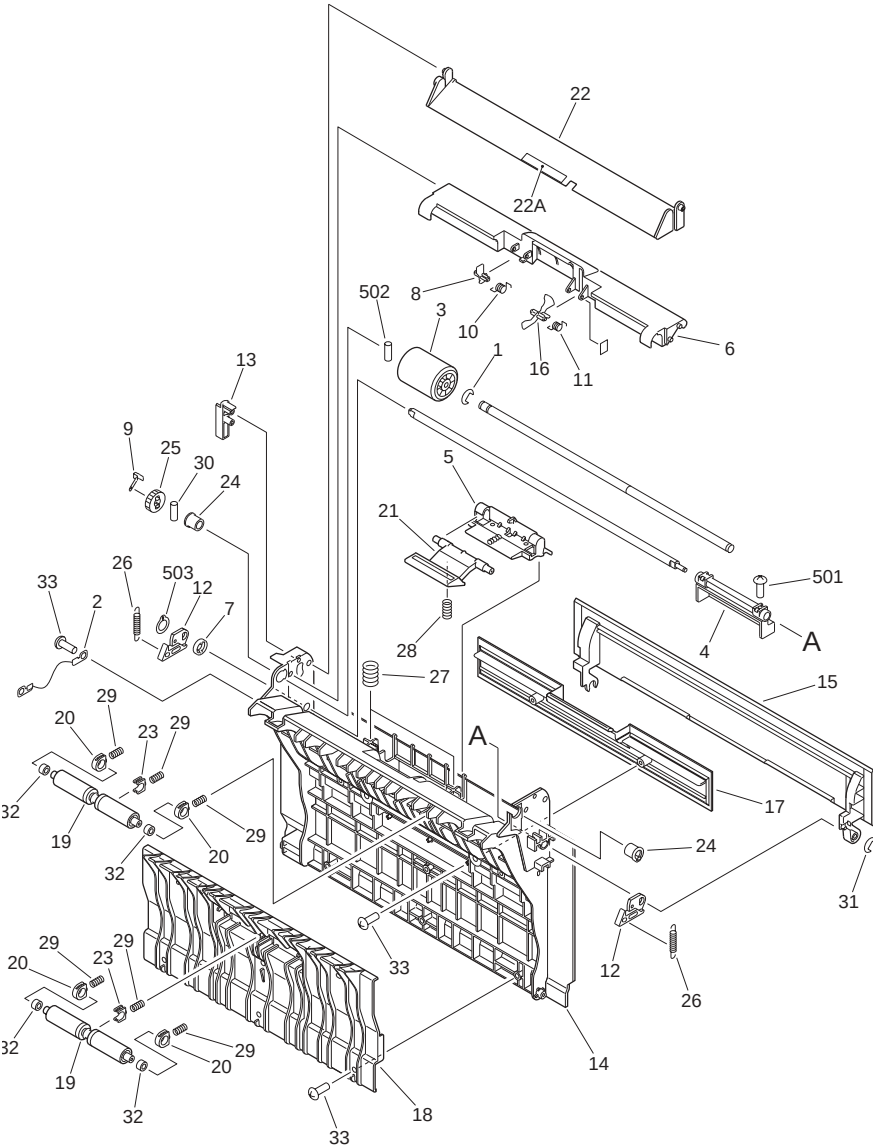

FIGURE & KEY NO.	PARTS NUMBER	RANK	Q'TY	DESCRIPTION	SERIAL NUMBER/ REMARKS	SVC
Fig.120	FG6-5648-000		1	RIGHT DOOR ASSEMBLY		

FIGURE & KEY NO.	PARTS NUMBER	RANK	Q'TY	DESCRIPTION	SERIAL NUMBER/ REMARKS	SVC
1	FA4-1159-000		1	RING, RETAINING		
2	FB1-8439-000		1	WIRE		
3	FB1-8581-000		1	ROLLER, PAPER PICK-UP		
3	FB1-8581-000		1	ROLLER, PAPER PICK-UP		
4	FB3-2812-000		1	HANDLE, RIGHT DOOR		
5	FB3-2815-000		1	ARM, MULTI FEED, 1		
6	FB6-2788-000		1	COVER, MULTI FEED ROLLER		
7	FB3-2821-000		1	BUSHING		
8	FB3-2833-000		1	FLAG, PAPER SENSOR, 2		
9	FB3-2834-000		1	PLATE, GROUNDING, MULTIROLLER		
10	FB3-2835-000		1	SPRING, TORSION		
11	FB4-3170-000		1	SPRING, TORSION		
12	FB6-2785-000		2	HOOK, RIGHT DOOR		
13	FB6-2786-000		1	ARM, CAM FOLLOWER		
14	FB5-4733-000		1	DOOR, RIGHT		
15	FB5-4766-000		1	DOOR, RIGHT UPPER		
16	FB5-5145-000		1	FLAG, MULTI PAPER SENSOR		
17	FB5-5194-000		1	PANEL, RIGHT DOOR BLANKING		
18	FB5-5195-000		1	GUIDE, INNER		
19	FB5-5199-000		2	ROLLER, PAPER FEED		
20	FA9-3967-000		4	HOLDER, ROLLER,BEARING		
21	FE5-4132-000		1	ARM, MULTI FEED		
22	FF6-0101-000		1	GUIDE, MULTI FEED		
22A	FB1-8584-000		1	SHEET, MANUAL FEED PLATE		
23	FS5-1598-000		2	BLOCK, ROLLER		
24	FS5-1950-000		2	BUSHING		
25	FS7-0761-000		1	GEAR, 19T		
26	FS6-2337-000		2	SPRING, TENSION		
27	FS6-2790-000		2	SPRING, COMPRESSION		
28	FS6-2791-000		1	SPRING, COMPRESSION		
29	FS7-2406-000		6	SPRING, COMPRESSION		
30	XD9-0104-000		1	PIN,DOWEL		

FIGURE & KEY NO.	PARTS NUMBER	RANK	Q'TY	DESCRIPTION	SERIAL NUMBER/ REMARKS	SVC
31	XD9-0134-000		1	RING,E		
32	FA9-3967-000		4	HOLDER, ROLLER,BEARING		
33	XA9-0605-000		9	SCREW,P,M4X8		
501	XB1-2400-809		1	SCREW,MACH.,TRUSS HEAD,M4X8		
502	XD3-2160-162		1	PIN,DOWEL		
503	XD2-2100-602		1	RING,GRIP		

FIGURE 130
CONTROL PANEL ASSEMBLY

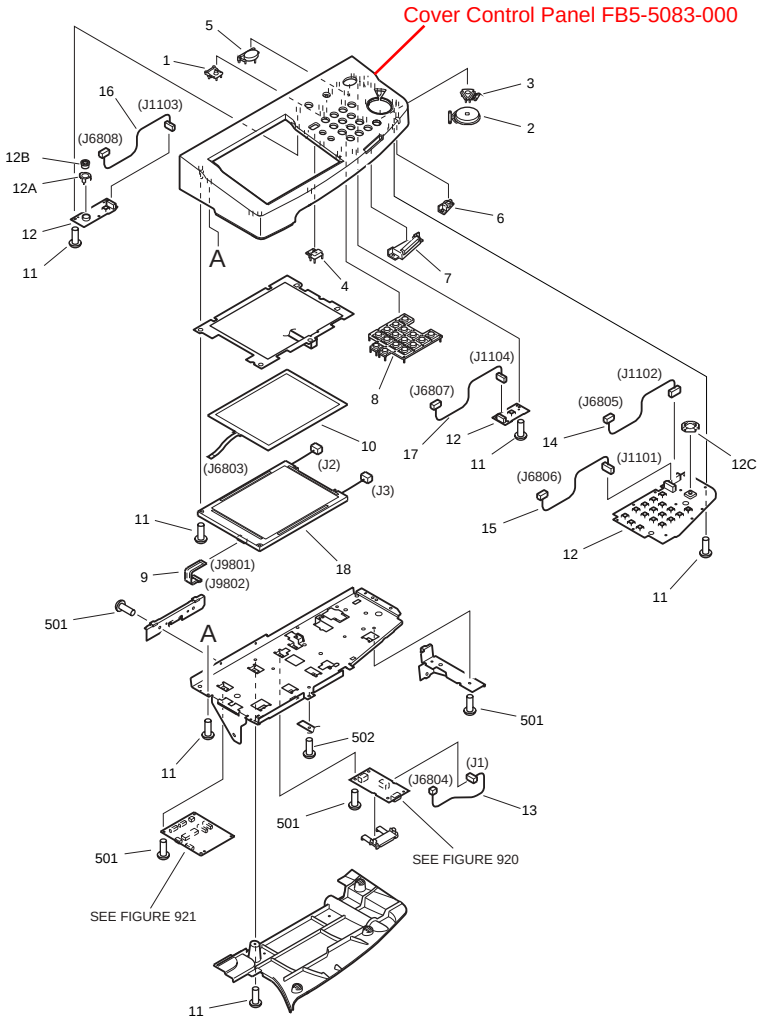

NOTE : This assembly includes the assemblies shown in Figure 920 and 921.

注 : このユニットはFigure 920, 921のユニットを含みます。

FIGURE & KEY NO.	PARTS NUMBER	RANK	Q'TY	DESCRIPTION	SERIAL NUMBER/ REMARKS	SVC
Fig.130	FG6-5753-000		1	CONTROL PANEL ASSEMBLY	JAPANESESEE NOTE	
Fig.130	FG6-5754-000		1	CONTROL PANEL ASSEMBLY	ENGLISH 120VSEE NOTE	
Fig.130	FG6-5755-000		1	CONTROL PANEL ASSEMBLY	ENGLISHRSD,REU,RSE, REV,JAH,JAK,JAR,JATSE E NOTE	
Fig.130	FG6-5756-000		1	CONTROL PANEL ASSEMBLY	ILLUSTRATIONSEE NOTE	
1	FB4-5005-000		1	KEY TOP, COUNTER		
2	FB5-2172-000		1	KEY TOP, START		
3	FB5-2173-000		1	KEY TOP, STOP		
4	FB5-3698-010		1	KEY TOP, RESET		
5	FB5-3699-000		1	KEY TOP, POWER SUPPLY		
6	FB5-5076-000		1	WINDOW, LAMP, 1		
7	FB5-5077-000		1	WINDOW, LAMP, 2		
8	FF6-0206-000		1	KEY TOP, NUMBERS		
9	FH2-6842-020		1	CABLE, FCC	J9801,9802	
10	FH6-0784-000		1	PANEL, TOUCH	J6803	
11	XA9-0591-000		22	SCREW, M3X8		
12	FG6-7021-000		1	CONTROL PANEL PCB ASSEMBLY		
12A	FB3-8320-000		1	PLATE, GROUNDING		
12B	FB5-3718-000		1	KNOB, CONTRAST		
12C	FB5-2195-000		1	HOLDER, LED		
13	FG6-7022-000		1	CABLE, CONTROL PANEL INVERTER	J1,6804	
14	FG6-7068-000		1	CABLE, CONTROL PANEL KEY, 1	J1102,6805	
15	FG6-7069-000		1	CABLE, CONTROL PANEL KEY, 2	J1101,6806	
16	FG6-7070-000		1	CABLE, COUNTER VR	J1103,6808	
17	FG6-7071-000		1	CABLE, SWITCH	J1104,6807	
18	FG6-9149-000		1	LCD CONTROL PANEL UNIT	J2,3,9801	
501	XB1-2300-607		11	SCREW, BH3X6(S)		
502	XB2-8300-607		1	SCREW, M3X6, S		

FIGURE 190
DEVELOPING FAN ASSEMBLY

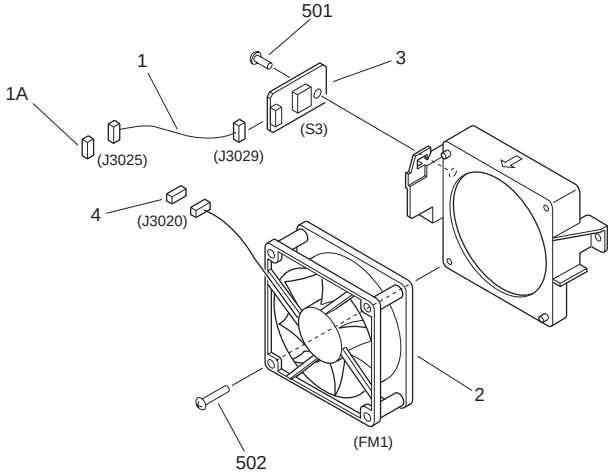

FIGURE & KEY NO.	PARTS NUMBER	RANK	Q'TY	DESCRIPTION	SERIAL NUMBER/ REMARKS	SVC
Fig.190	FG6-5638-000		1	DEVELOPING FAN ASSEMBLY		
1	FF3-4172-000		1	CABLE, ENVIRONMENT SENSOR	J3025,3029	
1A	VS1-7177-004		1	CONNECTOR, SNAP TIGHT	J3025	
2	FH6-1852-000		1	FAN	FM1 J3020	
3	FH7-7559-000		1	HUMIDITY SENSOR UNIT	S3 J3029	
4	VS1-7177-003		1	CONNECTOR, SNAP TIGHT	J3020	
501	XB4-7300-809		1	SCREW,TAPPING,TRUSS HEAD,M3X8		
502	XB4-7403-509		2	SCREW,TAPPING,TRUSS HEAD,M4X35		

FIGURE 191
MACHINE EXHAUST FAN ASSEMBLY

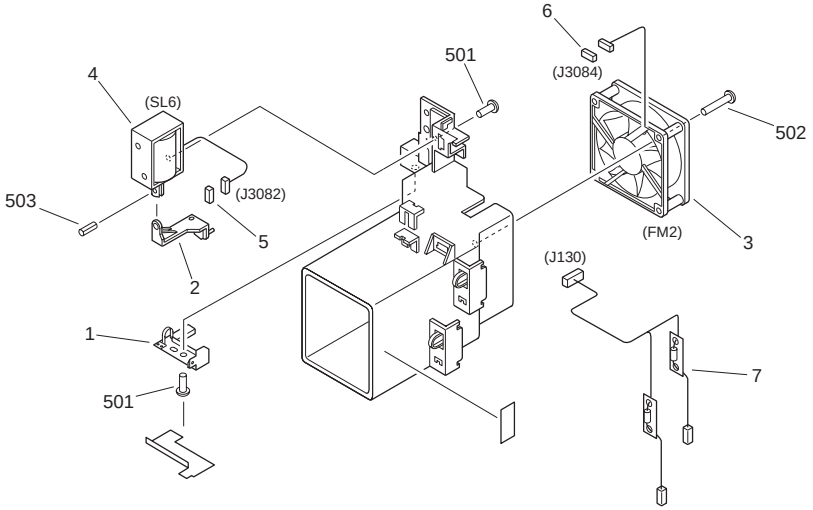

FIGURE & KEY NO.	PARTS NUMBER	RANK	Q'TY	DESCRIPTION	SERIAL NUMBER/ REMARKS	SVC
Fig.191	FG6-5814-050		1	MACHINE EXHAUST FAN ASSEMBLY		
1	FB5-5257-000		1	PLATE, TERMINAL		
2	FB5-5258-000		1	LINK, DRIVE		
3	FH6-1852-000		1	FAN	FM2 J3084	
4	FH6-5048-000		1	SOLENOID	SL6 J3082	
5	VS1-7177-002		1	CONNECTOR, SNAP TIGHT	J3082	
6	VS1-7177-003		1	CONNECTOR, SNAP TIGHT	J3084	
7	FG3-1615-000		1	CABLE, HV EXHAUST	J130	
501	XB1-2300-409		3	SCREW,MACH.,TRUSS HEAD,M3X4		
502	XB4-7403-509		2	SCREW,TAPPING,TRUSS HEAD,M4X35		
503	XD3-1300-102		1	PIN,SPRING		

FIGURE 250
MAIN DRIVE ASSEMBLY

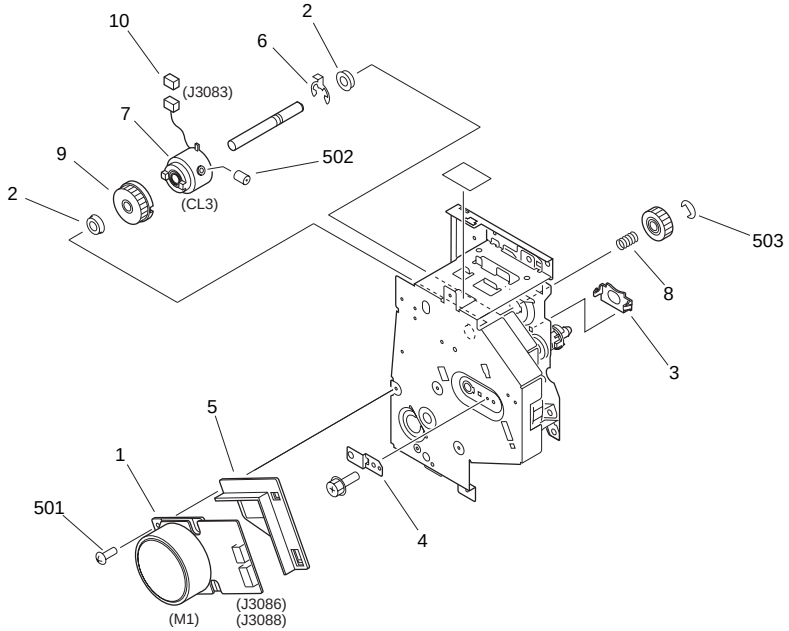

FIGURE & KEY NO.	PARTS NUMBER	RANK	Q'TY	DESCRIPTION	SERIAL NUMBER/ REMARKS	SVC
Fig.250	FG6-5727-040		1	MAIN DRIVE ASSEMBLY		
1	FH6-1846-000		1	MOTOR, DC BRUSHLESS	M1 J3086,3088	
2	FA9-2112-000		2	BUSHING		
3	FB3-2576-000		1	SUPPORT, SLEEVE		
4	FB5-5036-000		1	PLATE, GROUNDING		
5	FB5-5038-000		1	SHIELD, MOTOR		
6	FB5-5039-000		1	RING, E		
7	FH6-5007-000		1	CLUTCH, ELECTRO MAGNETIC	CL3 J3083	
8	FS5-2312-000		1	SPRING, COMPRESSION		
9	FS5-3815-000		1	PULLEY, 51T		
10	VS1-7177-002		1	CONNECTOR, SNAP TIGHT	J3083	
501	XB6-7300-609		4	SCREW,TP,M3X6		
502	XB6-2300-409		2	SETSCERW,M3X4		
503	XD2-1100-502		1	RING,E		

FIGURE 260
PAPER PICK-UP DRIVE ASSEMBLY

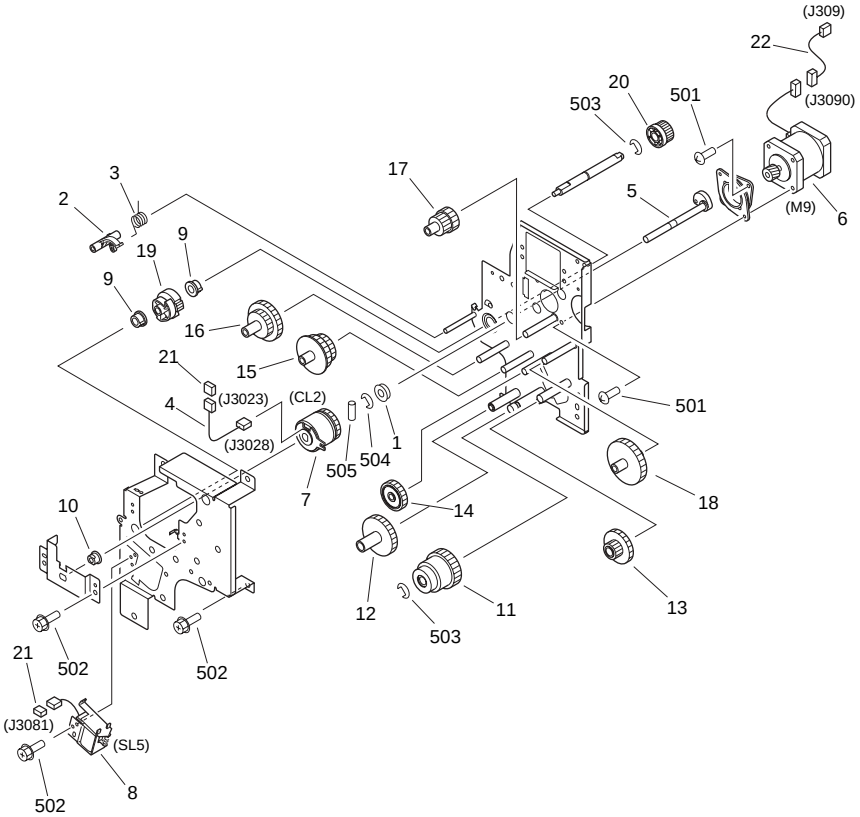

NOTE : This assembly does not include the part shown with key No. 22.

注：このユニットにKey No. 22の部品は含まれません。

FIGURE & KEY NO.	PARTS NUMBER	RANK	Q'TY	DESCRIPTION	SERIAL NUMBER/ REMARKS	SVC
Fig.260	FG6-5726-000		1	PAPER PICK-UP DRIVE ASSEMBLY		
1	FA9-2112-000		1	BUSHING		
2	FB5-5045-000		1	ARM, TRIGGER		

FIGURE & KEY NO.	PARTS NUMBER	RANK	Q'TY	DESCRIPTION	SERIAL NUMBER/ REMARKS	SVC
3	FB5-5046-000		1	SPRING, TORSION		
4	FF3-4190-020		1	CABLE, CLUTCH	J3023,3028	
5	FF6-0186-000		1	SHAFT, CAM JOINT		
6	FH6-1849-000		1	MOTOR, STEPPING	M9 J3090	
7	FH6-5006-000		1	CLUTCH, ELECTRO MAGNETIC	CL2 J3028	
8	FH6-5051-000		1	SOLENOID	SL5 J3081	
9	FS5-1943-000		2	BUSHING		
10	FU5-1615-000		1	BUSHING		
11	FS5-3824-000		1	PULLEY, 38T/34T		
12	FS7-0725-000		1	GEAR, 36T		
13	FS7-0726-000		1	GEAR, 36T/18T		
14	FS7-0727-000		1	GEAR, 33T		
15	FS7-0728-000		1	GEAR, 25T/39T		
16	FS7-0729-000		1	GEAR, 36T/24T		
17	FS7-0730-000		1	GEAR, 39T/20T		
18	FS7-0731-000		1	GEAR, 49T		
19	FS7-0737-000		1	GEAR, 24T		
20	FS7-0753-000		1	GEAR, 17T		
21	VS1-7177-002		2	CONNECTOR, SNAP TIGHT	J3023,3081	
22	FF3-4165-000		1	CABLE, REGISTRATION	SEE NOTE J309,3090	
501	XB1-2300-609		4	SCREW,MACH.,TRUSS HEAD,M3X6		
502	XB3-6300-609		7	SCREW,RS,M3X6		
503	XD2-1100-502		2	RING,E		
504	XD2-1100-642		1	RING,E		
505	XD3-2200-142		1	PIN,DOWEL		

FIGURE 261
DUPLEXING DRIVE ASSEMBLY

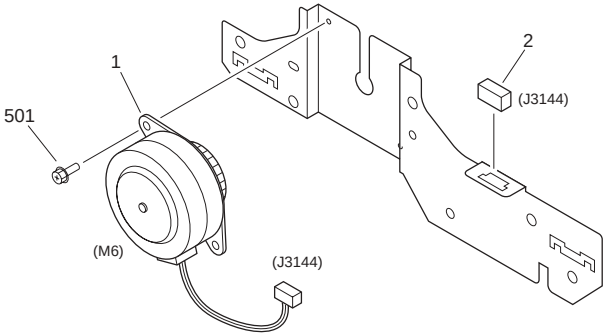

FIGURE & KEY NO.	PARTS NUMBER	RANK	Q'TY	DESCRIPTION	SERIAL NUMBER/ REMARKS	SVC
Fig.261	FG6-5651-000		1	DUPLEXING DRIVE ASSEMBLY		
1	FH6-1851-000		1	MOTOR, STEPPING	M6 J3144	
2	VS1-7177-004		1	CONNECTOR, SNAP TIGHT	J3144	
501	XB3-6300-609		2	SCREW,RS,M3X6		

FIGURE 280
FIXING FEEDER DRIVE ASSEMBLY

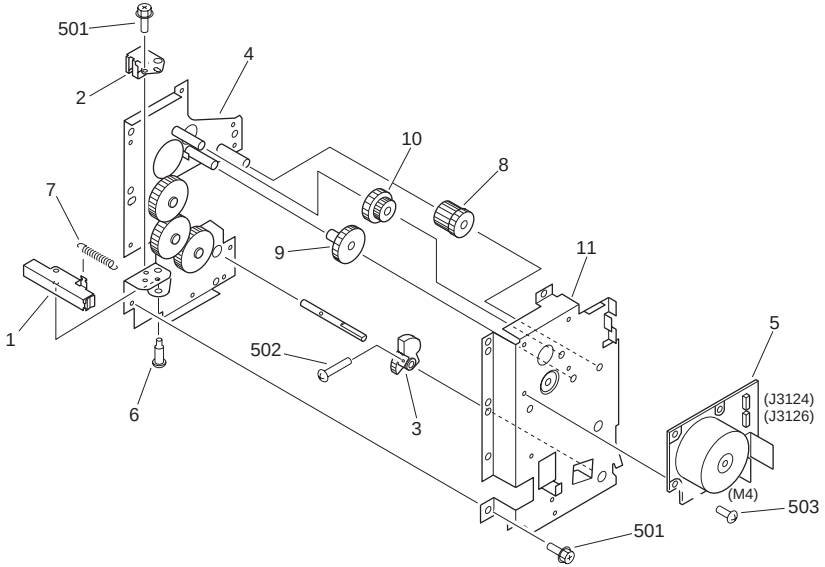

FIGURE & KEY NO.	PARTS NUMBER	RANK	Q'TY	DESCRIPTION	SERIAL NUMBER/ REMARKS	SVC
Fig.280	FG6-5703-000		1	FIXING FEEDER DRIVE ASSEMBLY		
1	FB1-7099-030		1	LEVER, STOP		
2	FB1-7190-000		1	COVER, LEVER		
3	FB5-4821-000		1	CAM, PRESSURE		
4	FF6-0141-000		1	LOWER PLATE, FEEDER DRIVE		
5	FH6-1848-000		1	MOTOR, DC BRUSHLESS	M4 J3124,3126	
6	FS1-9005-020		1	SCREW,STEPPED,M4		
7	FS5-2331-000		1	SPRING, TENSION		
8	FS7-0702-000		1	GEAR, 21T/28T		
9	FS7-0703-000		1	GEAR, 39T		
10	FS7-0704-000		1	GEAR, 23T/70T		
11	FG9-3987-000		1	UPPER PLATE FEEDER DRIVE ASSY		
501	XB3-6300-609		8	SCREW,RS,M3X6		
502	XB5-2401-609		1	SCREW,CT,M4X16		
503	XB6-7300-609		4	SCREW,TP,M3X6		

FIGURE 300
CASSETTE

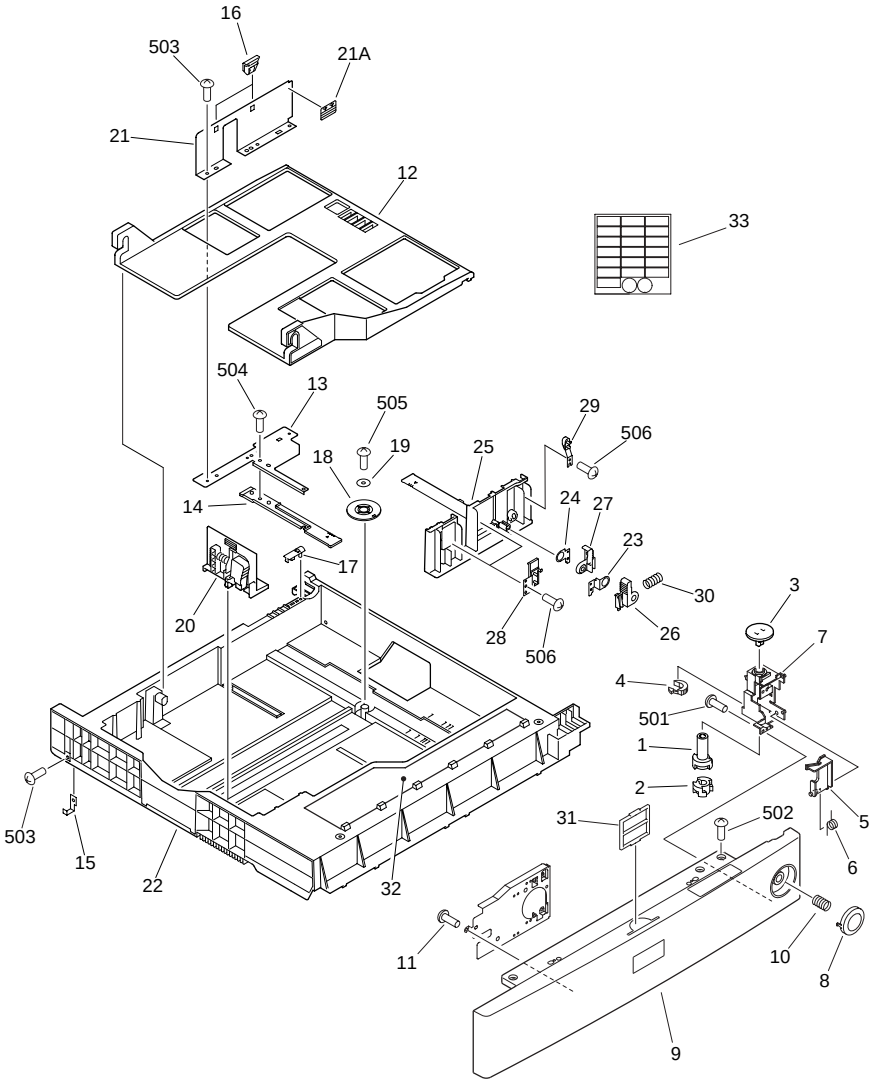

FIGURE & KEY NO.	PARTS NUMBER	RANK	Q'TY	DESCRIPTION	SERIAL NUMBER/ REMARKS	SVC
Fig.300	NPN		RF	CASSETTE		
1	FB3-2942-000		1	CAM, SIZE SENSOR, 2		
2	FB3-2943-000		1	CAM, SIZE SENSOR, 3		

FIGURE & KEY NO.	PARTS NUMBER	RANK	Q'TY	DESCRIPTION	SERIAL NUMBER/ REMARKS	SVC
3	FB5-3811-000		1	KNOB, SIZE SENSOR		
4	FB5-4735-000		1	CAM, SIZE SENSOR, 1		
5	FB5-4737-000		1	ARM, RELEASE	LARGE TYPE	
5	FB5-4738-000		1	ARM, RELEASE	MIDDLE TYPE	
6	FB5-4739-000		1	SPRING, TORSION		
7	FB5-4740-020		1	HINGE, CAM		
8	FB5-4743-000		1	BUTTON, CASSETTE		
9	FF6-0094-000		1	PANEL, CASSETTE, FRONT		
10	FS7-2400-000		1	SPRING, COMPRESSION		
11	XA9-0591-000		3	SCREW,M3X8		
12	FB3-2922-000		1	PLATE, PAPER LIFTING		
13	FB3-2926-000		1	PLATE, SIDE END		
14	FB3-2927-000		1	RACK, MANUAL		
15	FB3-2930-000		2	PLATE, STOP		
16	FB3-2934-000		2	CLAW, SIDE		
17	FB3-2953-000		1	BLOCK, SLIDER		
18	FB3-2955-000		1	GEAR, 20T		
19	FB3-2956-000		1	RING, GEAR STOP		
20	FB5-8353-000		1	PLATE,PAPER SIZE END		
21	FF5-4569-020		1	PLATE, SIDE END, REAR		
21A	FS6-8116-000		1	LABEL, 'PAPER HEIGHT'		
22	FF6-0098-000	N	1	BODY, CASSETTE	LARGE TYPE	
22	FF6-0099-000	N	1	BODY, CASSETTE	MIDDLE TYPE	
23	FA9-3313-030		1	PLATE, STOP, 1		
24	FA9-3314-030		1	PLATE, STOP, 2		
25	FB3-2928-000		1	PLATE, SIZE END, FRONT		
26	FB5-3812-000		1	KNOB, FRONT SIDE END PLATE, 1		
27	FB5-3813-000		1	KNOB, FRONT SIDE END PLATE, 2		
28	FF5-4491-000		2	BLOCK, SIDE, 2		
29	FF5-4548-030		1	BLOCK, SIDE, 1		
30	FS5-2650-000		1	SPRING, COMPRESSION		
31	FB5-9250-000		1	PLATE, CASSETTE PAPER SIZE		

FIGURE & KEY NO.	PARTS NUMBER	RANK	Q'TY	DESCRIPTION	SERIAL NUMBER/ REMARKS	SVC
32	FS7-8071-000		1	LABEL, 'PAPER SUPPLY'		
33	FS7-8072-000		2	LABEL, 'CASSETTE PAPER SIZE'		
501	XB1-2300-609		2	SCREW,MACH.,TRUSS HEAD,M3X6		
502	XB4-7401-009		2	SCREW,TAPPING,TRUSS HEAD,M4X10		
503	XB1-2300-409		5	SCREW,MACH.,TRUSS HEAD,M3X4		
504	XB1-2300-609		2	SCREW,MACH.,TRUSS HEAD,M3X6		
505	XB4-7300-809		1	SCREW,TAPPING,TRUSS HEAD,M3X8		
506	XB4-7300-609		3	SCREW,TAPPING,TRUSS HEAD,M3X6		

FIGURE 310
PAPER PICK-UP MOUNT ASSEMBLY

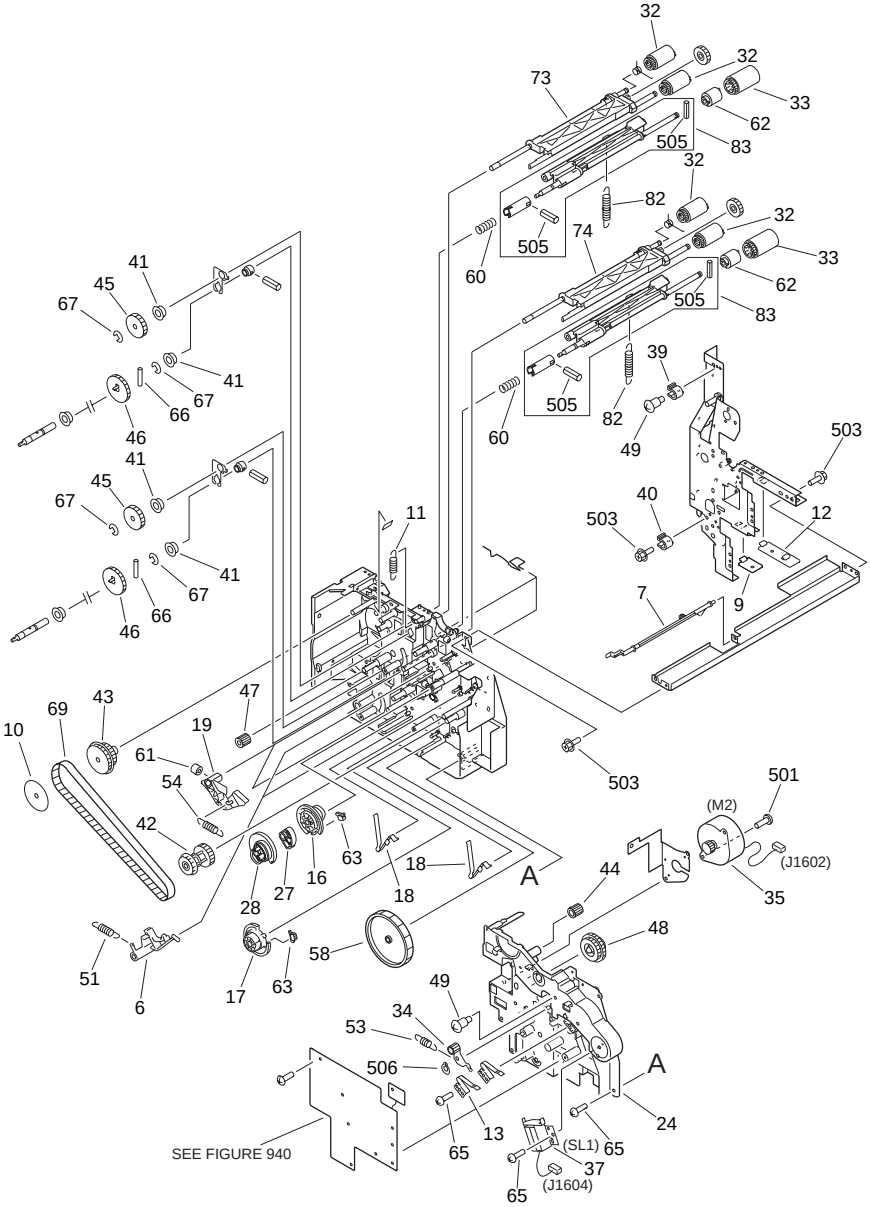

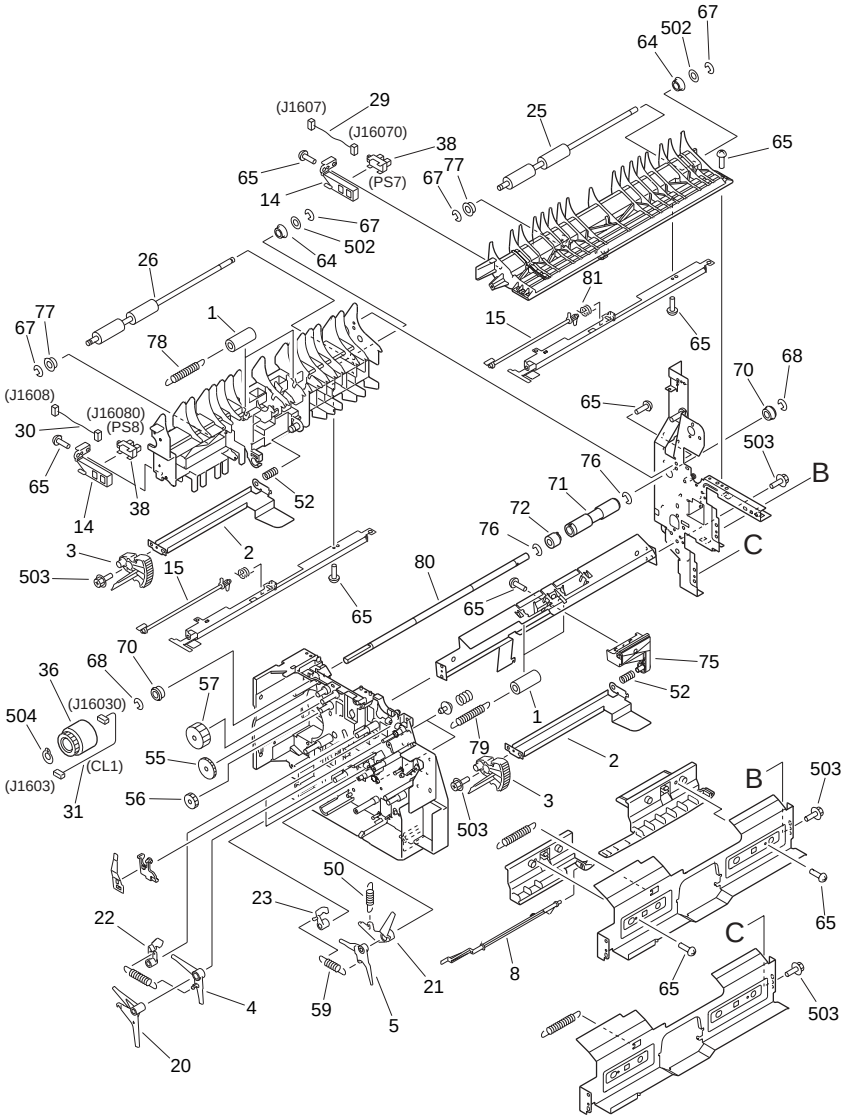

FIGURE & KEY NO.	PARTS NUMBER	RANK	Q'TY	DESCRIPTION	SERIAL NUMBER/ REMARKS	SVC
Fig.310	NPN		RF	PAPER PICK-UP MOUNT ASSEMBLY		

FIGURE & KEY NO.	PARTS NUMBER	RANK	Q'TY	DESCRIPTION	SERIAL NUMBER/ REMARKS	SVC
1	FB6-2776-000		4	ROLLER, PAPER FEED		
2	FB6-2777-000		2	PLATE, LIFTER		
3	FB6-2778-000		2	GEAR, RATCHET		
4	FB6-2779-000		1	LEVER, LIFTER, UPPER		
5	FB6-2780-000		1	LEVER, LIFTER, LOWER		
6	FB6-2781-000		2	CLAW, LIFTER LOCK		
7	FB6-2782-000		1	FLAG, PAPER SENSOR, UPPER		
8	FB6-2783-000		1	FLAG, PAPER SENSOR, LOWER		
9	FB3-2894-020		1	GUIDE, LOWER CASSETTE		
10	FB3-2896-000		1	PLATE, BELT SUPPORT		
11	FS7-2413-000		1	SPRING, TENSION		
12	FB3-2897-020		1	GUIDE, UPPER CASSETTE		
13	FB3-2898-020		1	SPRING, LEAF		
14	FB4-2817-000		2	MOUNT, SENSOR		
15	FB4-3343-000		2	FLAG, RETRY SENSOR		
16	FB6-2787-020		1	CAM, LIFT UP, UPPER		
17	FB5-9802-000		1	CAM, LIFT UP, LOWER		
18	FB4-5349-000		2	SPRING, LEAF		
19	FB6-2789-020		2	CLAW, LIFTER ARM		
20	FB5-9794-000		1	ARM, LIFTER, UPPER		
21	FB6-2790-000		1	ARM, LIFTER, LOWER		
22	FB5-9795-000		1	LEVER, LOCK, UPPER		
23	FB6-2792-000		1	LEVER, PICK LOCK, LOWER		
24	FB5-4728-000		1	COVER, PAPER PICK-UP FRAME		
25	FB5-4779-000		1	ROLLER, PAPER FEED, UPPER		
26	FB5-4780-000		1	ROLLER, PAPER FEED, LOWER		
27	FB5-5286-000		1	CAM, PICK-UP ROLLER, UPPER		
28	FB5-5287-000		1	CAM, PICK-UP ROLLER, LOWER		
29	FF3-2974-000		1	CABLE, UPPER RETRY SENSOR	J1607,16070	
30	FF3-2975-000		1	CABLE, LOWER RETRY SENSOR	J1608,16080	
31	FF3-4175-000		1	CABLE, VERTICAL PATH CLUTCH	J1603,16030	
32	FF5-4552-020		4	ROLLER, PAPER PICK-UP		

FIGURE & KEY NO.	PARTS NUMBER	RANK	Q'TY	DESCRIPTION	SERIAL NUMBER/ REMARKS	SVC
33	FF5-4634-020		2	ROLLER, PAPER SEPARATION		
34	FF5-4524-020		1	PLATE, TENSION		
35	FH6-1477-000		1	MOTOR, DC24V	M2 J1602	
36	FH6-5005-020		1	CLUTCH, ELECTRO MAGNETIC	CL1 J16030	
37	FH6-5020-000		1	SOLENOID	SL1 J1604	
38	FK2-0149-000		2	PHOTO-INTERRUPTER	PS7,8 J16070,16080	
39	FS5-1589-000		1	BUSHING		
40	FS5-1946-000		1	BUSHING		
41	FS5-1948-000		4	BUSHING		
42	FS5-3620-000		1	PULLEY, 32T/40T		
43	FS5-3830-000		1	PULLEY, 25T/GEAR, 28T		
44	FS5-3833-000		1	PULLEY, 24T		
45	FS6-0564-000		2	GEAR, 35T		
46	FS6-0565-000		2	GEAR, 42T		
47	FS7-0758-000		1	GEAR, 14T		
48	FS7-0756-000		1	GEAR, 35T/44T		
49	FS1-9010-020		2	SCREW,STEPPED,M3X2.2		
50	FS7-2414-000		1	SPRING, TENSION		
51	FS6-2328-020		2	SPRING, TENSION		
52	FS6-2330-000		2	SPRING, COMPRESSION		
53	FS6-2331-000		1	SPRING, TENSION		
54	FS6-2900-000		2	SPRING, TENSION		
55	FS7-0103-000		1	GEAR, 35T		
56	FS7-0104-000		1	GEAR, 24T		
57	FS7-0757-000		1	GEAR, 35T		
58	FS7-0752-000		1	GEAR, 86T		
59	FS7-2408-000		1	SPRING, TENSION		
60	FS7-2409-000		2	SPRING, COMPRESSION		
61	RB1-6539-000		2	DAMPER		
62	FB6-5091-000		2	LIMITER, TORQUE		
63	RB1-6592-000		2	GEAR, 3T		
64	XG9-0407-000		2	BEARING, BALL, DDLF1060ZZ LY13		

FIGURE & KEY NO.	PARTS NUMBER	RANK	Q'TY	DESCRIPTION	SERIAL NUMBER/ REMARKS	SVC
65	XA9-0591-000		28	SCREW,M3X8		
66	XD9-0104-000		3	PIN,DOWEL		
67	XD9-0131-000		8	RING,E		
68	XD9-0137-010		2	RING,E		
69	XF2-1121-540		1	BELT, TIMING		
70	XG9-0403-000		2	BEARING, BALL		
71	FB5-4776-000		1	ROLLER, VERTICAL PATH, 1		
72	FB5-4777-000		1	CLUTCH, ONE-WAY		
73	FF6-0108-000		1	HOLDER, ROLLER, UPPER	Shafts not included	
74	FF6-0109-000		1	HOLDER, ROLLER, LOWER		
75	FB6-4577-000		1	ARM, LIFTER SUPPORT		
76	XD9-0137-010		2	RING,E		
77	FS5-1597-000		2	BUSHING		
78	FS6-2327-000		2	SPRING, ROLLER		
79	FS7-2417-000		2	SPRING, ROLLER		
80	FB5-4778-000		1	SHAFT, VERTICAL PATH POLLER		
81	FB4-2814-000		1	SPRING, SENSOR		
82	FS6-2326-000		1	SPRING, ROLLER		
83	FG8-1199-000		2	C ROLLER ASEEMBLY		
501	XB1-2300-409		2	SCREW,MACH.,TRUSS HEAD,M3X4		
502	XD1-1106-215		2	SHIM		
503	XB3-6300-805		18	SCREW,RS,M3X8		
504	XD2-2100-802		1	RING,GRIP		
505	XD3-1200-122		4	PIN,SPRING		
506	XD2-2100-402		1	RING,GRIP		

FIGURE 315
MULTI FEEDER TRAY ASSEMBLY

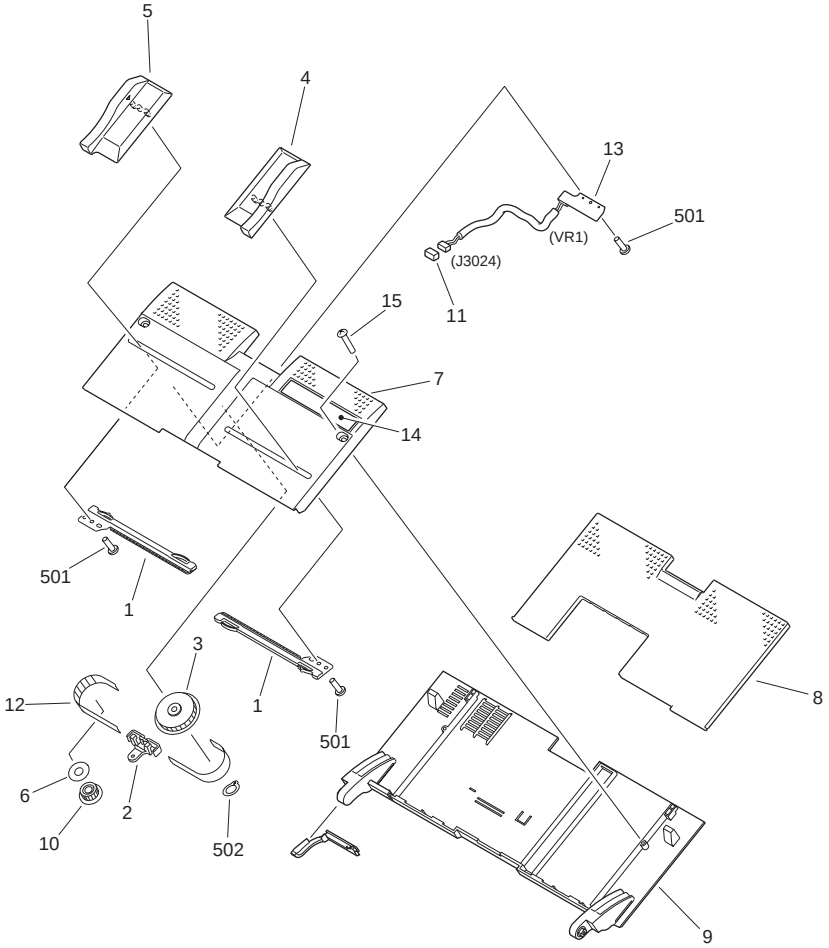

NOTE : This assembly does not include the part shown with key No. 14.

注：このユニットにKey No. 14の部品は含まれません。

FIGURE & KEY NO.	PARTS NUMBER	RANK	Q'TY	DESCRIPTION	SERIAL NUMBER/ REMARKS	SVC
Fig.315	FG6-5649-000		1	MULTI FEEDER TRAY ASSEMBLY		

FIGURE & KEY NO.	PARTS NUMBER	RANK	Q'TY	DESCRIPTION	SERIAL NUMBER/ REMARKS	SVC
1	FB1-8619-000		2	RACK		
2	FB1-8621-000		1	PLATE, LOCK		
3	FB1-8625-000		1	GEAR, 18T		
4	FB5-3577-000		1	PLATE, PAPER END, FRONT		
5	FB5-3578-000		1	PLATE, PAPER END, REAR		
6	FB3-2836-000		1	SUPPORT, BELT		
7	FB4-3264-000		1	TRAY, MULTI FEED		
8	FB4-3265-000		1	TRAY, SLIDE		
9	FB5-4745-000		1	PANEL, MULTI FEEDER TRAY		
10	FS5-3177-000		1	PULLEY, IDLER		
11	VS1-7177-003		1	CONNECTOR, SNAP TIGHT	J3024	
12	XF9-0393-000		1	BELT, TIMING		
13	FG5-6289-000		1	MULTI PAPER SIZE PCB ASSEMBLY	VR1 J3024	
14	FS5-8612-000		1	LABEL, SIZE	AB SIZESEE NOTE	
14	FS5-8613-000		1	LABEL, SIZE	AB/INCH SIZESEE NOTE	
14	FS5-8614-000		1	LABEL, SIZE	A/INCH SIZESEE NOTE	
14	FS5-8615-000		1	LABEL, SIZE	A SIZESEE NOTE	
15	XA9-0606-000		2	SCREW, M4X10		
501	XB4-7300-609		3	SCREW,TAPPING,TRUSS HEAD,M3X6		
502	XD2-2100-502		1	RING,GRIP		

FIGURE 320
REGISTRATION FRONT GUIDE ASSEMBLY

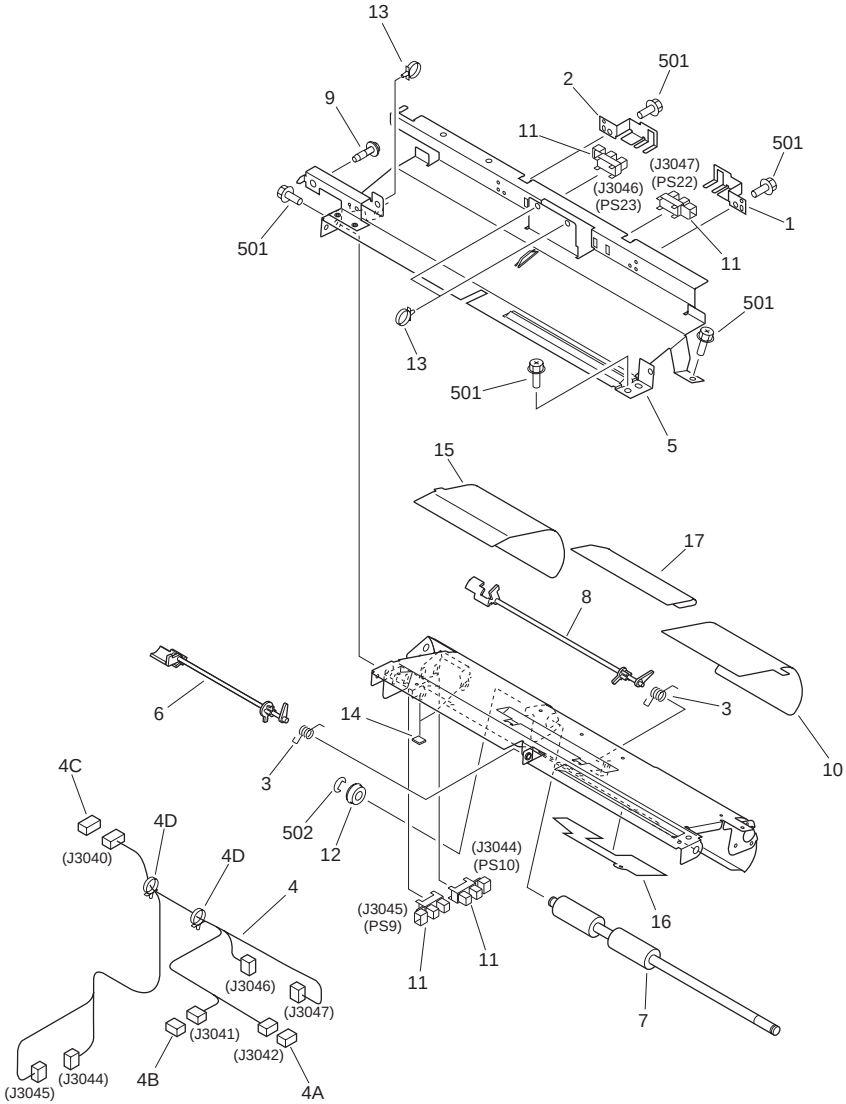

FIGURE & KEY NO.	PARTS NUMBER	RANK	Q'TY	DESCRIPTION	SERIAL NUMBER/ REMARKS	SVC
Fig.320	NPN		RF	REGIST. FRONT GUIDE ASSEMBLY		
1	FB3-2648-000		1	PLATE, SENSOR, FRONT		

FIGURE & KEY NO.	PARTS NUMBER	RANK	Q'TY	DESCRIPTION	SERIAL NUMBER/ REMARKS	SVC
2	FB3-2649-000		1	PLATE, SENSOR, REAR		
3	FB3-2658-000		2	SPRING, TORSION		
4	FG3-1596-000		1	CABLE, REGISTRATION FRONT	J3040-3042,3044-3047	
4A	VS1-7177-003		1	CONNECTOR, SNAP TIGHT	J3042	
4B	VS1-7440-006		1	CONNECTOR, SNAP TIGHT	J3041	
4C	VS1-6319-024		1	CONNECTOR, SNAP TIGHT	J3040	
4D	WT2-5565-000		2	CLAMP, CABLE		
5	FB5-4711-000		1	GUIDE, REGIST. FRONT, UPPER		
6	FB5-4713-020		1	FLAG, REGIST. FRONT SENSOR		
7	FB5-4714-000		1	ROLLER, REGISTRATION FRONT, 2		
8	FB5-5146-000		1	FLAG, REGISTRATION FRONT, 2		
9	FB5-5288-000		1	SCREW,RS,M4X16		
10	FB5-4722-020		1	SHEET, REGISTRATION FRONT, 1		
11	FK2-0149-000		4	PHOTO-INTERRUPTER	PS9,10,22,23J3045,3044, 3047,3046	
12	FS5-1949-000		1	BUSHING		
13	WT2-5565-000		3	CLAMP, CABLE		
14	FB5-5150-000		2	RUBBER, NOISE PREVENTION		
15	FB5-5281-000		1	SHEET, REGISTRATION FRONT, 2		
16	FB5-5282-000		1	SHEET, REGISTRATION FRONT, 3		
17	FB5-5283-000		1	SHEET, REGISTRATION FRONT, 4		
501	XB3-6300-805		5	SCREW,RS,M3X8		
502	XD2-1100-502		1	RING,E		

FIGURE 330
PAPER FEEDER ASSEMBLY

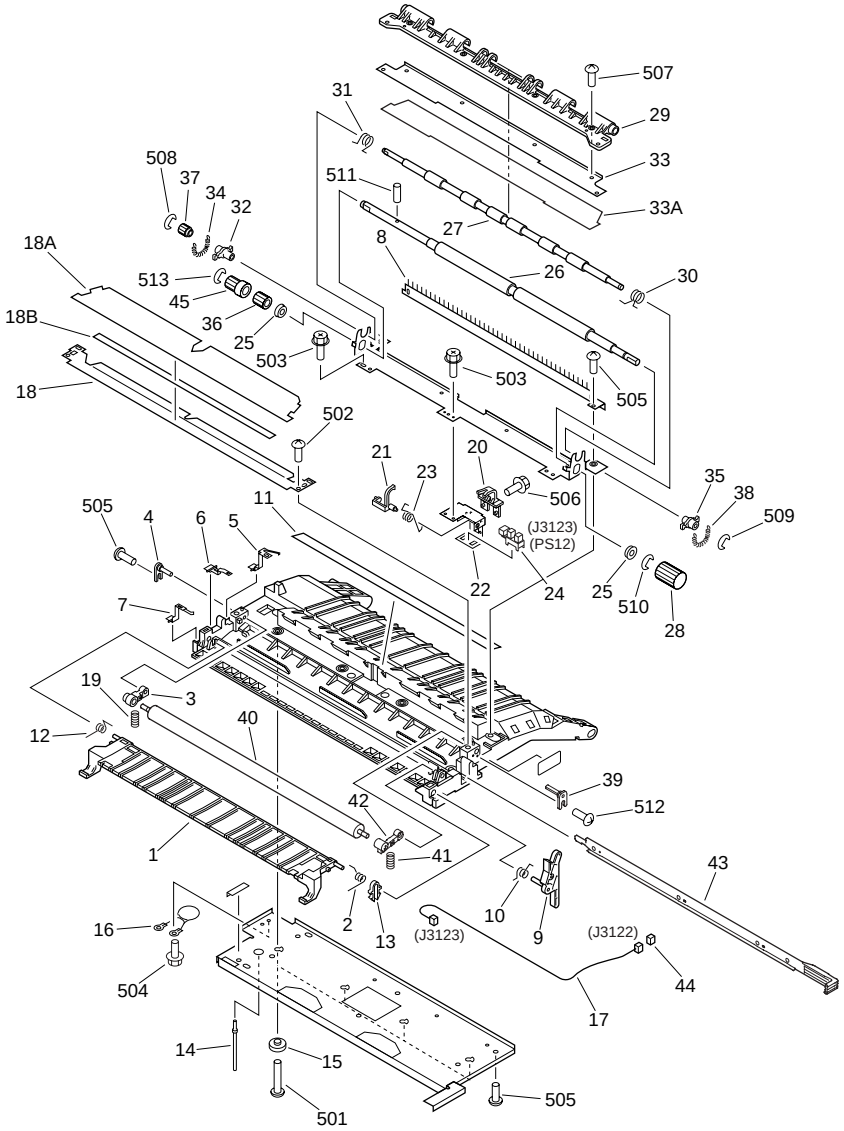

NOTE : This assembly does not include the parts shown with key No. 39, 40, 41, 42, 43, 44, 45, 512, and 513.

注：このユニットにKey No. 39, 40, 41, 42, 43, 44, 45, 512, 513の部品は含まれません。

FIGURE & KEY NO.	PARTS NUMBER	RANK	Q'TY	DESCRIPTION	SERIAL NUMBER/ REMARKS	SVC
Fig.330	FG6-5670-000		1	PAPER FEEDER ASSEMBLY		
1	FB5-4782-000		1	GUIDE, PAPER FEEDER		
2	FB5-4783-000		1	SPRING, TORSION		
3	FB5-4785-000		1	ARM, TRANSFER		
4	FB5-4787-000		1	PIN, POSITIONING		
5	FB5-4788-000		1	TERMINAL PLATE, TRANSFER GUIDE		
6	FB5-4789-000		1	TERMINAL PLATE, TRANSFER		
7	FB5-4790-000		1	TERMINAL PLATE, ELIMINATOR		
8	FB5-4791-000		1	ELIMINATOR, STATIC CHARGE		
9	FB5-4793-000		1	ARM, SHUTTER		
10	FB5-4794-000		1	SPRING, TORSION		
11	FB5-4795-000		1	SHEET, GUIDE		
12	FB5-4796-000		1	SPRING, TORSION		
13	FB5-4798-000		1	HOOK, RIB STOP		
14	FB5-4832-000		1	SHAFT, LIFTER, REAR		
15	FB5-4835-000		4	SPACER, SCREW		
16	FF3-1173-000		1	VARISTOR UNIT		
17	FF3-4179-000		1	CABLE, TOP SENSOR	J3122,3123	
18	FF6-0105-000		1	GUIDE, TRANSFER, LOWER		
18A	FB5-4811-000		1	SHEET, TRANSFER		
18B	FB5-4814-000		1	SHEET, TRANSFER AUXILIARY		
19	FS7-2382-000		1	SPRING, COMPRESSION		
20	FB5-4799-000		1	GUIDE, TOP SENSOR		
21	FB5-4800-000		1	LINK, TOP SENSOR		
22	FB5-4801-000		1	HOLDER, TOP SENSOR		
23	FB5-4802-000		1	SPRING, TORSION		
24	FH7-7557-020		1	PHOTO-INTERRUPTER	PS12 J3123	
25	FA1-0056-000		2	BUSHING		
26	FB5-4804-000		1	ROLLER, PRE-TRANSFER, LOWER		
27	FB5-4805-000		1	ROLLER, PRE-TRANSFER, UPPER		
28	FB5-4808-000		1	KNOB, PRE-TRANSFER ROLLER		
29	FB5-4813-000		1	BRACKET, PRE-TRANSFER GUIDE		

FIGURE & KEY NO.	PARTS NUMBER	RANK	Q'TY	DESCRIPTION	SERIAL NUMBER/ REMARKS	SVC
30	FB5-4833-000		1	SPRING, TORSION		
31	FB5-4834-000		1	SPRING, TORSION		
32	FE5-4046-000		1	BUSHING, REGIST. ROLLER		
33	FF6-0106-000		1	GUIDE, TRANSFER, UPPER		
33A	FB5-4812-000		1	SHEET, TRANSFER		
34	FS2-2783-000		1	SPRING, TENSION		
35	FS5-1944-000		1	BUSHING		
36	FS7-0739-000		1	GEAR, 32T		
37	FS7-0740-000		1	GEAR, 26T		
38	FS7-2383-000		1	SPRING, TENSION		
39	FB5-4787-000		1	PIN, POSITIONING	SEE NOTE	
40	FF6-0104-000		1	ROLLER, TRANSFER	SEE NOTE	
41	FS7-2382-000		1	SPRING, COMPRESSION	SEE NOTE	
42	FB5-4786-000		1	ARM, TRANSFER, FRONT	SEE NOTE	
43	FF5-7246-000		1	ELIMINATOR, STATIC CHARGE	SEE NOTE	
44	VS1-7177-003		1	CONNECTOR, SNAP TIGHT	SEE NOTE J3122	
45	FS5-3820-000		1	PULLEY, 24T	SEE NOTE	
501	XB1-2401-809		4	SCREW,MACH.,TRUSS HEAD,M4X18		
502	XB2-8400-809		2	SCREW,W/WASHER,M4X8		
503	XB3-6300-605		5	SCREW,RS,M3X6		
504	XB3-6400-800		1	SCREW,RS,M4X8		
505	XB4-7400-809		15	SCREW,TAPPING,TRUSS HEAD,M4X8		
506	XB3-6300-605		1	SCREW,RS,M3X6		
507	XB1-2300-409		4	SCREW,MACH.,TRUSS HEAD,M3X4		
508	XD2-1100-322		1	RING,E		
509	XD2-1100-502		1	RING,E		
510	XD2-1100-642		2	RING,E		
511	XD3-2160-102		1	PIN,DOWEL		
512	XB4-7400-809		1	SCREW,TAPPING,TRUSS HEAD,M4X8	SEE NOTE	
513	XD2-1100-402		1	RING,E	SEE NOTE	

FIGURE 350
PAPER DELIVERY ASSEMBLY

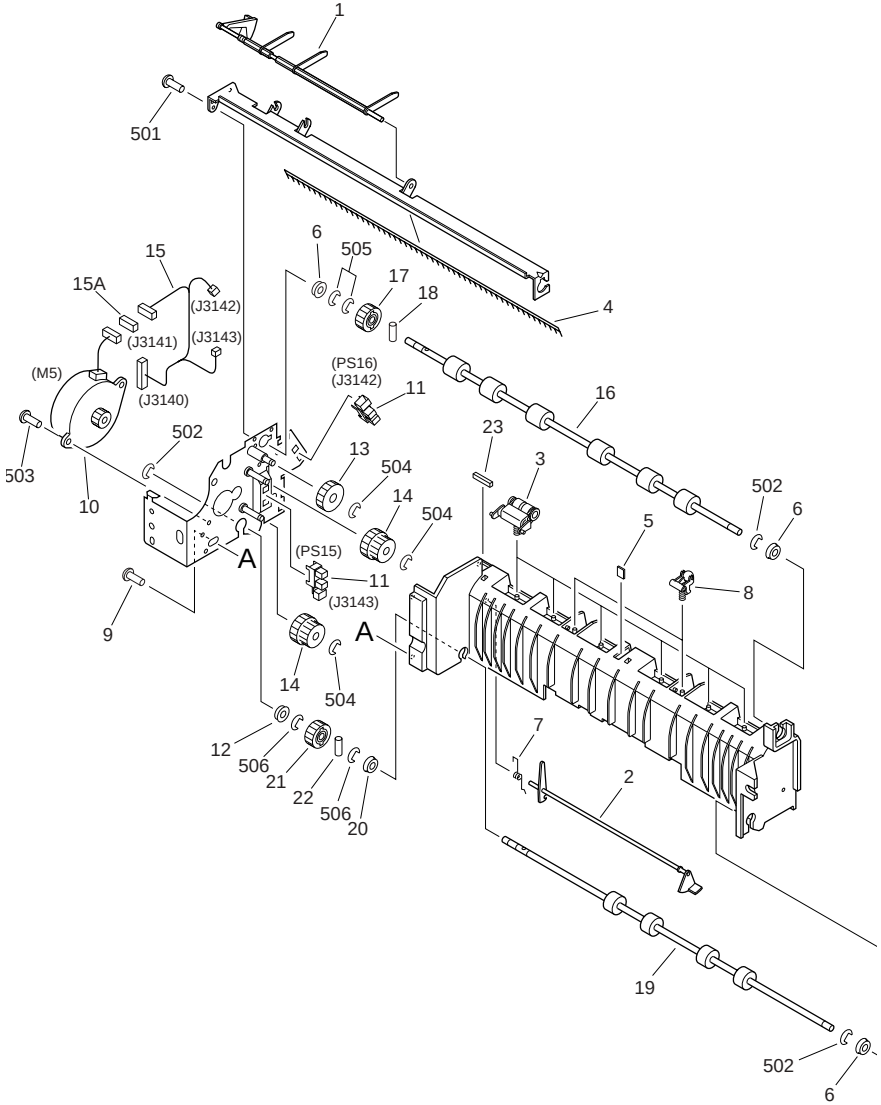

FIGURE & KEY NO.	PARTS NUMBER	RANK	Q'TY	DESCRIPTION	SERIAL NUMBER/ REMARKS	SVC
Fig.350	FG6-5691-000		1	PAPER DELIVERY ASSEMBLY		
1	FB5-4853-000		1	LINK, PAPER FULL SENSOR		

FIGURE & KEY NO.	PARTS NUMBER	RANK	Q'TY	DESCRIPTION	SERIAL NUMBER/ REMARKS	SVC
2	FB5-4854-000		1	ARM, SENSOR		
3	FF6-0132-000		6	HOLDER, ROLLER		
4	FB5-4858-000		1	ELIMINATOR, STATIC CHARGE		
5	FB5-5150-000		1	RUBBER, NOISE PREVENTION		
6	FS5-1943-000		3	BUSHING		
7	FS7-2390-000		1	SPRING, TORSION		
8	FF6-0345-000		2	DELIVERY COLLAR UNIT		
9	XA9-0605-000		4	SCREW,P,M4X8		
10	FH6-1850-000		1	MOTOR, STEPPING	M5 J3141	
11	FH7-7557-020		2	PHOTO-INTERRUPTER	PS15,16 J3143,J3142	
12	FS5-1943-000		1	BUSHING		
13	FS7-0746-000		1	GEAR, 21T		
14	FS7-0747-000		2	GEAR, 17T/27T		
15	FG3-1598-000		1	CABLE, PAPER DELIVERY	J3140-3143	
15A	VS1-7177-004		1	CONNECTOR, SNAP TIGHT	J3141	
16	FB5-4855-000		1	ROLLER, PAPER DELIVERY		
17	FS7-0745-000		1	GEAR, 16T		
18	XD9-0104-000		1	PIN,DOWEL		
19	FB5-4856-000		1	ROLLER, VERTICAL PATH		
20	FS1-1202-000		1	BUSHING		
21	FS7-0744-000		1	GEAR, 16T		
22	XD9-0104-000		1	PIN,DOWEL		
23	FB5-9787-000		1	PAD, NOISE PREVENTION		
501	XB1-2300-805		1	SCREW,MACH.,TRUSS HEAD,M3X8		
502	XD2-1100-502		3	RING,E		
503	XB1-2300-805		2	SCREW,MACH.,TRUSS HEAD,M3X8		
504	XD2-1100-502		3	RING,E		
505	XD2-1100-502		2	RING,E		
506	XD2-1100-502		2	RING,E		

FIGURE 351
LEFT VERTICAL PATH ASSEMBLY

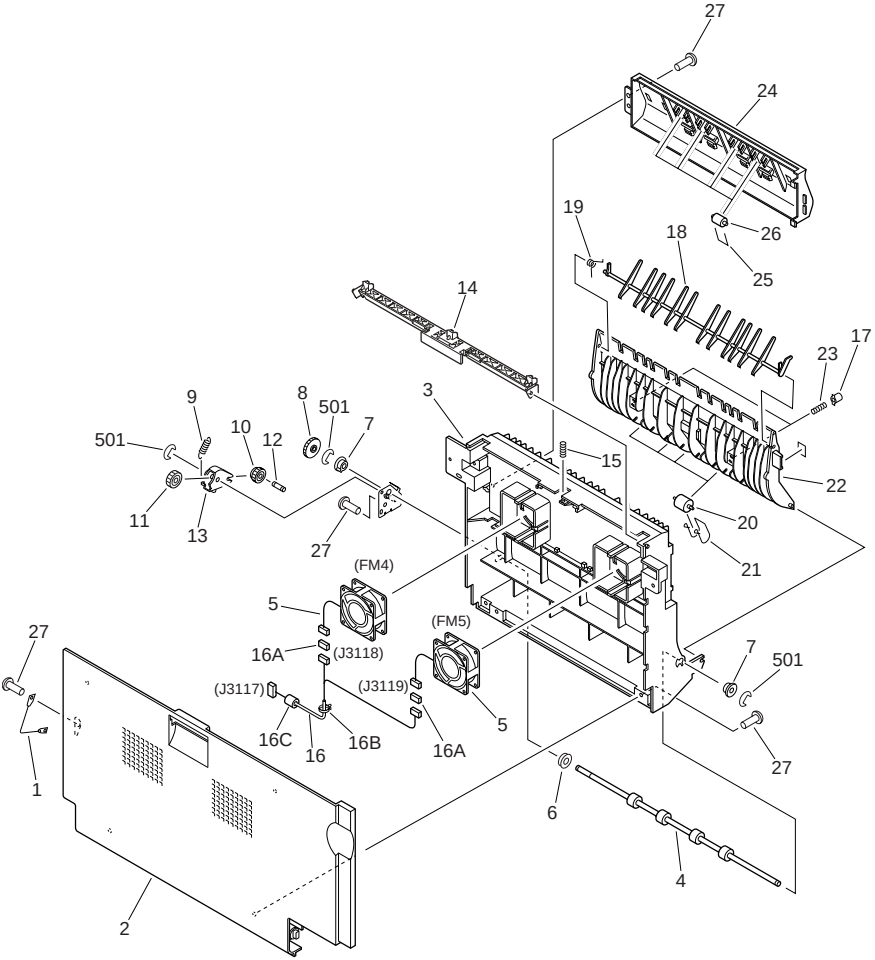

FIGURE & KEY NO.	PARTS NUMBER	RANK	Q'TY	DESCRIPTION	SERIAL NUMBER/ REMARKS	SVC
Fig.351	FG6-5698-000		1	LEFT VERTICAL PATH ASSEMBLY		
1	FB1-6841-000		1	WIRE, DELIVERY SUPPORT		
2	FB5-4911-000		1	PANEL, PAPER DELIVERY		
3	FB5-4912-000		1	GUIDE, PAPER DELIVERY		
4	FB5-4919-000		1	ROLLER, DELIVERY DUPLEXING		
5	FH6-1854-000		2	FAN	FM4,5 J3118,3119	

FIGURE & KEY NO.	PARTS NUMBER	RANK	Q'TY	DESCRIPTION	SERIAL NUMBER/ REMARKS	SVC
6	FS1-1202-000		1	BUSHING		
7	FS5-1943-000		2	BUSHING		
8	FS7-0701-000		1	GEAR, 24T		
9	FS7-2372-000		1	SPRING, TENSION		
10	RA9-1124-000		1	GEAR, 18T		
11	FB6-2767-000		1	GEAR, 19T		
12	FB6-6546-000		1	SHAFT, GEAR		
13	FB6-2768-000		1	LEVER, SWING		
14	FB6-2769-000		1	LEVER, DELIVERY COVER		
15	RS5-2489-000		1	SPRING, COMPRESSION		
16	FG3-1599-000		1	CABLE, CURL CORRECT FAN	J3117-3119	
16A	VS1-7177-003		2	CONNECTOR, SNAP TIGHT	J3118,3119	
16B	WT2-5565-000		2	CLAMP, CABLE		
16C	WE8-5857-000		1	CORE, FERRITE		
17	FB4-3104-000		2	CAP, SPRING		
18	FB5-4914-000		1	DEFLECTOR, DELIVERY INLET		
19	FB5-4915-000		1	SPRING, TORSION		
20	FB5-5260-000		4	COLLAR, DUPLEXING INLET		
21	FB5-5261-000		4	SPRING, TORSION		
22	FF6-0139-000		1	GUIDE, PAPER DELIVERY, LOWER		
23	FS7-2398-000		2	SPRING, COMPRESSION		
24	FB5-4916-000		1	GUIDE, VERTICAL PATH		
25	FB5-4918-000		4	HOOK, PAPER DELIVERY ROLLER		
26	FB5-4920-000		4	ROLLER, FEED		
27	XA9-0605-000		7	SCREW,P,M4X8		
501	XD2-1100-502		3	RING,E		

FIGURE 360
DUPLEXING FEEDER ASSEMBLY

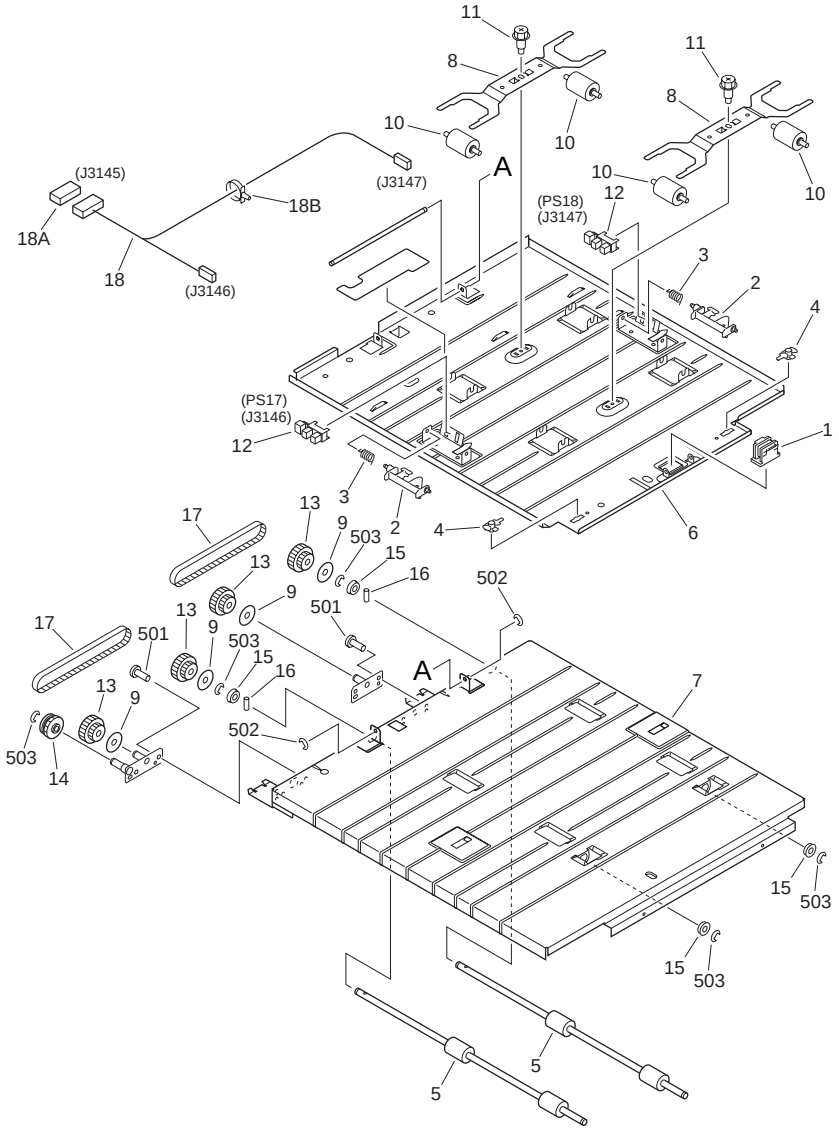

FIGURE & KEY NO.	PARTS NUMBER	RANK	Q'TY	DESCRIPTION	SERIAL NUMBER/ REMARKS	SVC
Fig.360	FG6-5650-000		1	DUPLEXING FEEDER ASSEMBLY		
1	FB3-2997-000		1	MAGNET, CATCH		

FIGURE & KEY NO.	PARTS NUMBER	RANK	Q'TY	DESCRIPTION	SERIAL NUMBER/ REMARKS	SVC
2	FB6-2784-000		2	FLAG, DUPLEXING P. FEED SENSOR		
3	FB4-2935-000		2	SPRING, TORSION		
4	FB4-2955-000		2	SPACER, GUIDE		
5	FB5-4747-000		2	ROLLER, DUPLEXING FEEDER		
6	FB5-4748-000		1	GUIDE, DUPLEXING FEEDER, UPPER		
7	FB5-4749-00U		1	RECONDITIONED GUIDE, LOWER		
8	FB5-4750-000		2	SPRING, LEAF		
9	FB5-4754-000		4	SPACER		
10	FB5-4773-000		4	ROLLER, DUPLEXING		
11	FS5-9664-000		2	SCREW,RS STEPPED,M3		
12	FK2-0149-000		2	PHOTO-INTERRUPTER	PS17,18 J3146,3147	
13	FS7-0722-000		4	PULLEY, 26T/GEAR, 24T		
14	FS7-0723-000		1	GEAR, 20T		
15	XG9-0482-000		4	BUSHING		
16	XD9-0103-000		2	PIN,DOWEL		
17	XF2-3112-940		2	BELT, TIMING		
18	FG3-1597-000		1	CABLE, DUPLEXING FEEDER	J3145-3147	
18A	VS1-7440-006		1	CONNECTOR, SNAP TIGHT	J3145	
18B	WT2-5565-000		1	CLAMP, CABLE		
501	XB3-6300-600		4	SCREW,RS,M3X6		
502	XD2-1100-242		2	RING,E		
503	XD2-1100-502		5	RING,E		

FIGURE 460
SCANNER ASSEMBLY

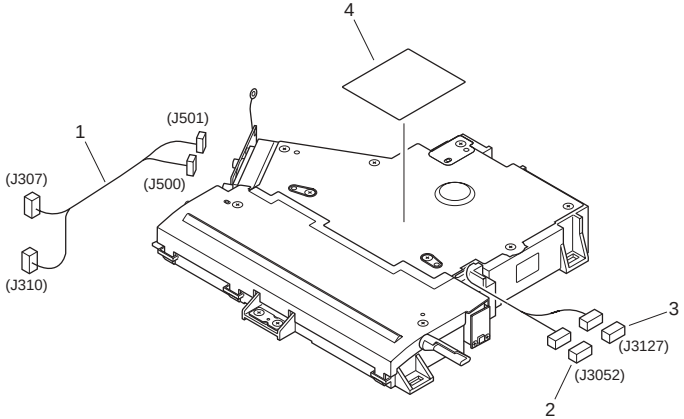

FIGURE & KEY NO.	PARTS NUMBER	RANK	Q'TY	DESCRIPTION	SERIAL NUMBER/ REMARKS	SVC
Fig.460	FG6-5633-000		1	SCANNER ASSEMBLY		
1	FG3-1592-000		1	CABLE, LASER	J307,310,500,501	
2	VS1-7177-002		1	CONNECTOR, SNAP TIGHT	J3052	
3	VS1-7177-003		1	CONNECTOR, SNAP TIGHT	J3127	
4	RS6-8382-000		1	LABEL, 'WARNING LASER'		

FIGURE 500
DRUM CARTRIDGE ASSEMBLY

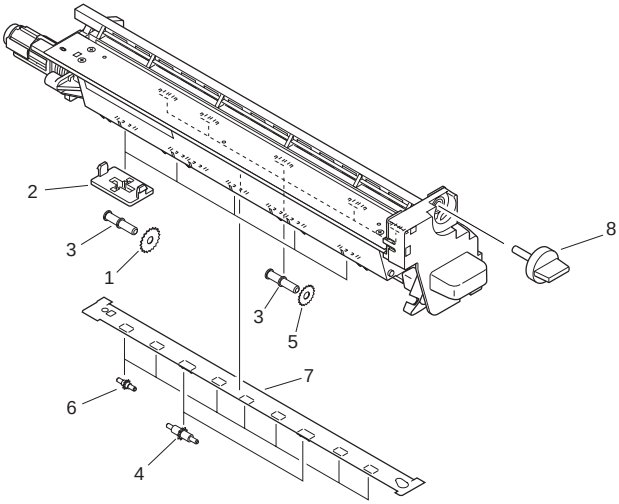

FIGURE & KEY NO.	PARTS NUMBER	RANK	Q'TY	DESCRIPTION	SERIAL NUMBER/ REMARKS	SVC
Fig.500	NPN		RF	DRUM CARTRIDGE ASSEMBLY		
1	FB5-4986-000		5	ROWEL, 1		
2	FB5-5019-000		5	HOLDER, ROWEL, 1		
3	FB5-5269-000		10	SHAFT, ROWEL		
4	FB5-5270-000		2	ROWEL, 2		
5	FB5-5273-000		5	ROWEL, 3		
6	FC7-2665-000		7	ROWEL, 4		
7	FF6-0160-000		1	SHEET, CONTAINER, LOWER		
8	FA6-5618-000		1	KNOB, CARTRIDGE		

FIGURE 640
DEVELOPING ASSEMBLY

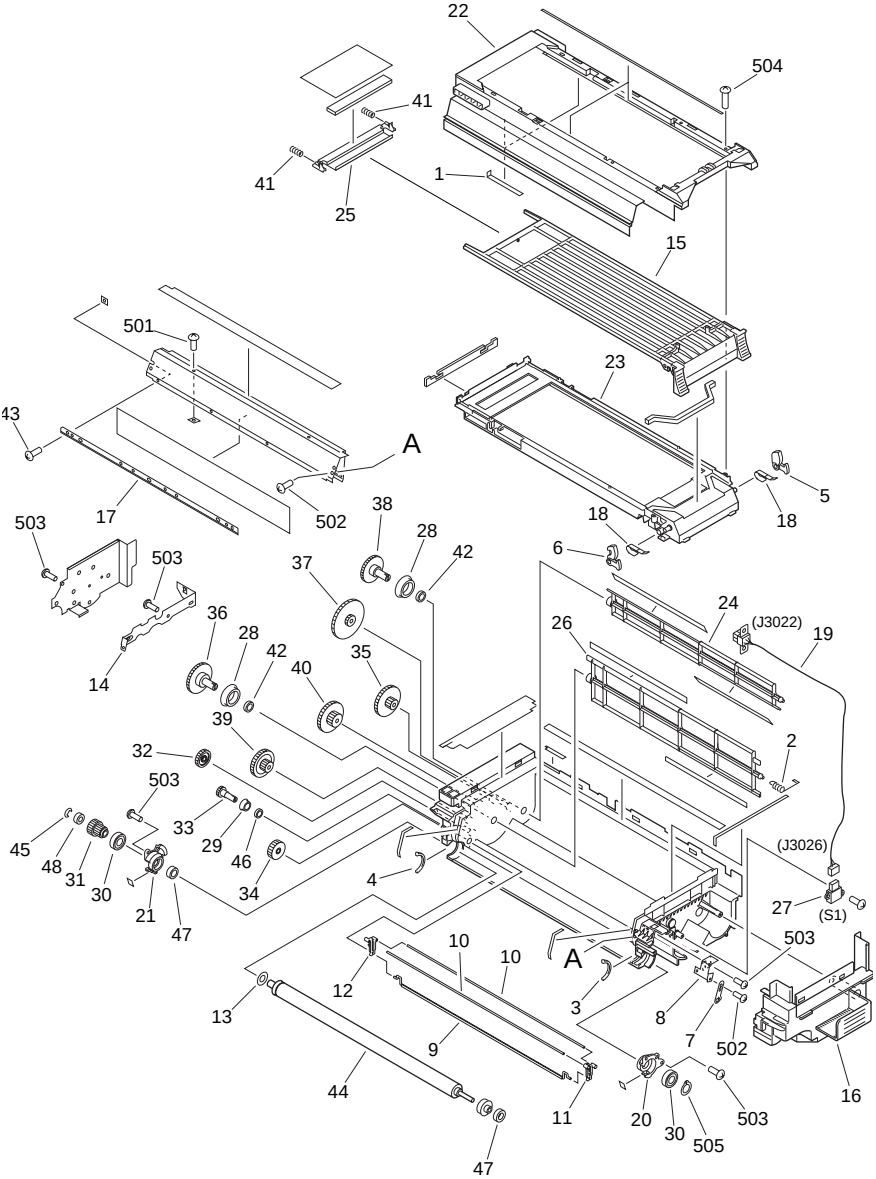

FIGURE & KEY NO.	PARTS NUMBER	RANK	Q'TY	DESCRIPTION	SERIAL NUMBER/ REMARKS	SVC
Fig.640	FG9-3917-000		1	DEVELOPING ASSEMBLY		
1	FB1-5816-000		2	SPRING, LEAF		
2	FB1-6710-000		1	SPRING, COMPRESSION		
3	FB1-6718-000		1	SEAL, FRONT		
4	FB1-6719-000		1	SEAL, REAR		
5	FB1-7218-000		1	CARTRIDGE LOCK, RIGHT		
6	FB1-7219-000		1	CARTRIDGE LOCK, LEFT		
7	FB1-8130-000		1	PLATE, POSITIONING		
8	FB3-2672-000		1	PLATE, TERMINAL, FRONT		
9	FB3-2679-000		1	ROD, STIRRING		
10	FB3-2712-000		2	SHAFT, AUXILIARY		
11	FB4-3057-000		1	SUPPORT, STIRRING, FRONT		
12	FB4-3058-000		1	SUPPORT, STIRRING, REAR		
13	FB4-3355-000		1	SHEET, HOLE BLANKING		
14	FB5-4953-000		1	PLATE, BIAS		
15	FB5-4965-000		1	COVER, SLIDE		
16	FB5-4966-000		1	COVER, DEVELOPING, FRONT		
17	FB5-4968-000		1	BLADE		
18	FE5-4134-000		2	SPRING, LEAF		
19	FF3-4188-000		1	CABLE, TONER SENSOR	J3022,3026	
20	FF5-4480-000		1	HOLDER, SLEEVE, FRONT		
21	FF5-4481-000		1	HOLDER, SLEEVE, REAR		
22	FF6-0153-000		1	COVER, HOPPER, UPPER		
23	FF6-0154-000		1	COVER, HOPPER, LOWER		
24	FF6-0155-000		1	STIRRER, 3		
25	FF6-0156-000		1	COVER, BUFFER		
26	FF6-0157-000		1	STIRRER, 2		
27	FH7-7422-000		1	SENSOR, TONER	S1 J3026	
28	FS1-1594-000		2	BUSHING		
29	FS5-1212-000		1	BUSHING		
30	FS5-6448-000		2	ROLLER, 1		
31	FS6-0552-000		1	GEAR, 20T		

FIGURE & KEY NO.	PARTS NUMBER	RANK	Q'TY	DESCRIPTION	SERIAL NUMBER/ REMARKS	SVC
32	FS6-0579-000		1	GEAR, 26T		
33	FS6-0592-000		1	GEAR, 14T		
34	FS7-0717-000		1	GEAR, 28T		
35	FS7-0718-000		1	GEAR, 15T/48T		
36	FS7-0719-000		1	GEAR, 17T/48T		
37	FS7-0720-000		1	GEAR, 15T/65T		
38	FS7-0721-000		1	GEAR, 40T		
39	FS7-0754-000		1	GEAR, 20T/48T		
40	FS7-0755-000		1	GEAR, 15T/43T		
41	FS7-2405-000		2	SPRING, COMPRESSION		
42	X71-9310-000		2	SEAL, OIL		
43	XA9-0714-000		4	SCREW,M3X4		
44	FG9-3913-000		1	DEVELOPING CYLINDER UNIT		
45	XD9-0131-000		1	RING,E		
46	XG9-0111-000		1	SEAL, OIL		
47	XG9-0218-000		2	BEARING, BALL		
48	XG9-0262-000		1	BEARING, BALL		
501	XB1-2300-409		2	SCREW,MACH.,TRUSS HEAD,M3X4		
502	XB1-2300-805		3	SCREW,MACH.,TRUSS HEAD,M3X8		
503	XB4-7300-809		13	SCREW,TAPPING,TRUSS HEAD,M3X8		
504	XB4-7301-609		4	SCREW,TAPPING,TRUSS HEAD,M3X16		
505	XD2-2100-802		1	RING,GRIP		

FIGURE 810
FIXING ASSEMBLY

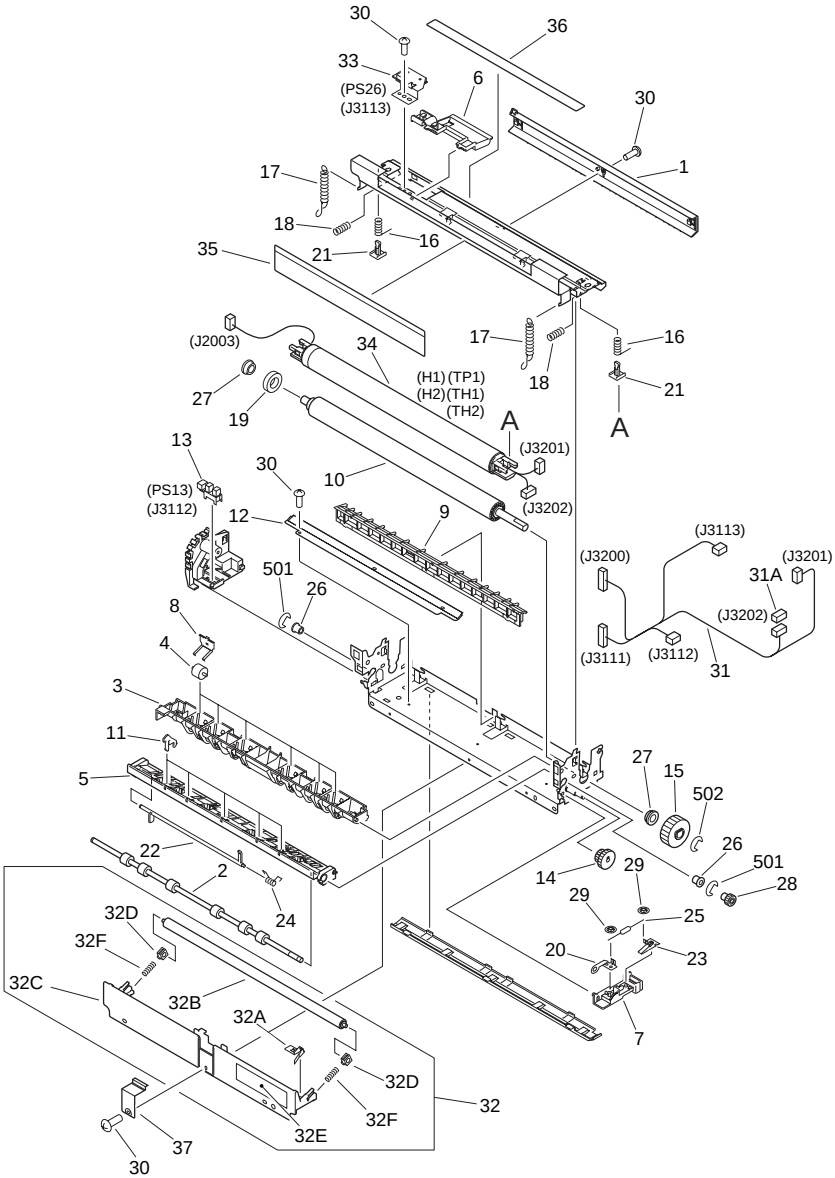

FIGURE & KEY NO.	PARTS NUMBER	RANK	Q'TY	DESCRIPTION	SERIAL NUMBER/ REMARKS	SVC
Fig.810	FG6-5702-190		1	FIXING ASSEMBLY	100V	
Fig.810	FG6-6038-200		1	FIXING ASSEMBLY	120V	
Fig.810	FG6-6040-200		1	FIXING ASSEMBLY	220/240V	
1	FB5-4923-000		1	GUIDE, INLET, UPPER		
2	FB5-4925-000		1	ROLLER, FIXING DELIVERY		
3	FB5-4926-000		1	GUIDE, FIXING DELIVERY, UPPER		
4	FB5-4927-000		6	COLLAR, FIXING DELIVERY		
5	FB5-4928-000		1	GUIDE, FIXING DELIVERY, LOWER		
6	FB5-4934-000		1	COVER, FILM SENSOR		
7	FB5-4938-000		1	MOUNT, FILM BIAS		
8	FB5-4940-000		6	SPRING, LEAF		
9	FB5-4941-000		1	GUIDE, INLET		
10	FB5-4942-000		1	ROLLER, PRESSURE		
11	FB5-4943-000		5	RIB, FIXING GUIDE, LOWER		
12	FB5-5148-000		1	ELIMINATOR, STATIC CHARGE		
13	FK2-0149-000		1	PHOTO-INTERRUPTER	PS13 J3112	
14	FS7-0708-000		1	GEAR, 17T/19T		
15	FS7-0709-000		1	GEAR, 27T		
16	FS7-2373-000		2	SPRING, COMPRESSION		
17	FS7-2374-000		2	SPRING, TENSION		
18	FS7-2375-000		2	SPRING, COMPRESSION		
19	RB2-1920-000		1	RUBBER		
20	RB2-1929-000		1	SPRING, LEAF		
21	RB2-1930-000		2	PIN		
22	FB6-2860-000		1	LEVER, SENSOR		
23	RB2-1947-000		1	SPRING, LEAF		
24	RB2-4389-000		1	SPRING, TORSION		
25	RH5-3058-000		1	RESISTOR, 68MOHM, 1/2W		
26	RS1-1087-000		2	BUSHING		
27	RS5-1446-000		2	BUSHING		
28	RS6-0354-000		1	GEAR, 15T		
29	XA9-0134-000		2	NUT, PUSH		

FIGURE & KEY NO.	PARTS NUMBER	RANK	Q'TY	DESCRIPTION	SERIAL NUMBER/ REMARKS	SVC
30	XA9-0702-000		8	SCREW,M3		
31	FG3-1600-000		1	CABLE, FIXING, DC	J3111-3113,3200-3202	
31A	VS1-7177-002		1	CONNECTOR, SNAP TIGHT	J3202	
32	FG6-5709-000		1	CLEANING ROLLER ASSEMBLY		
32A	FB5-4930-000		1	PLATE, CLEANING ROLLER		
32B	FB5-4931-000		1	ROLLER, FIXING HEATSINK		
32C	FB5-4932-000		1	MOUNT, CLEANING ROLLER		
32D	FS5-1945-000		2	BUSHING		
32E	FS7-8267-000		1	LABEL, CAUTION		
32F	RS6-2192-000		2	SPRING, COMPRESSION		
33	FG6-5710-000		1	FIXING FILM SENSOR PCB ASS'Y	PS26 J3113	
34	FG6-5712-120		1	FIXING FILM ASSEMBLY	100VH1,H2,TP1,TH1,TH2 J2003,3201,3202	
34	FG6-6039-120		1	FIXING FILM ASSEMBLY	120VH1,H2,TP1,TH1,TH2 J2003,3201,3202	
34	FG6-6041-120		1	FIXING FILM ASSEMBLY	220/ 240VH1,H2,TP1,TH1,TH2 J2003,3201,3202	
35	FB5-4929-000		1	SHEET, FIXING		
36	FB5-4948-000		1	SHEET, FIXING, 2		
37	FB5-4944-000		1	REINFORCEMENT, FIXING GUIDE		
501	XD2-1100-502		2	RING,E		
502	XD2-1100-642		1	RING,E		

FIGURE 900
CONTROLLER BOX ASSEMBLY

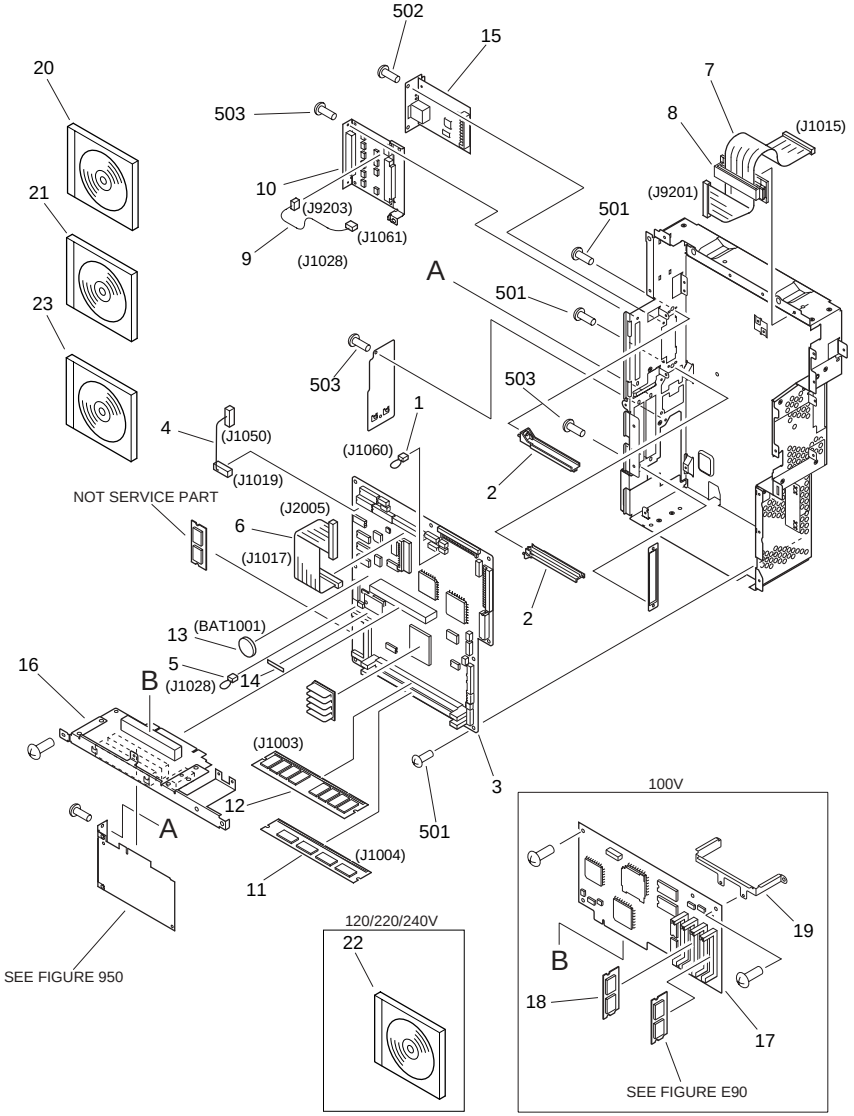

FIGURE & KEY NO.	PARTS NUMBER	RANK	Q'TY	DESCRIPTION	SERIAL NUMBER/ REMARKS	SVC
Fig.900	NPN		RF	CONTROLLER BOX ASSEMBLY		
1	FF3-4199-000		1	CABLE, CC-4	J1060	
2	RB1-7067-000		2	RAIL, GUIDE		
3	FG3-2232-080		1	MAIN CONTROLLER PCB ASSEMBLY	IR2200I/iR2800I/IR3300I	
3	FG3-2492-000		1	MAIN CONTROLLER PCB ASSEMBLY	IR2220I/2220N/ 2250IIR2820I/2850I/ 3320IIR3320N/3320G/ 3350I	
4	FG3-1744-020		1	CENTRO PCB ASSEMBLY	J1019,1050	
5	FF3-4219-000		1	SHORTING CONNECTOR	J1028	
6	FH2-7197-000		1	CABLE, FLAT, HD	J1017,2005	
7	FG3-1994-000		1	CABLE, FLAT	J1015,9201	
8	WE8-5925-000		1	CORE, FERRITE		
9	FG3-2238-000		1	CABLE, POWER SUPPLY	J1061,9203	
10	FG6-5831-000		1	DIFFERENTIAL PCB ASSEMBLY		
11	WA7-2437-020		1	DIMM,MT4LSDT864AG-133F1,SDRAM	IR2200I/iR2800I/ IR3300IJ1004	
12	WA7-3407-000		1	DIMM,MT16LSDT3264AG-133G1	IR2220I/2220N/ 2250IIR2820I/2850I/ 3320IIR3320N/3320G/ 3350IJ1003	
12	WA7-3406-000		1	DIMM,MT8LSDT1664AG-133G1	EXCPET IR2220I/2220N/ 2250IIR2820I/2850I/ 3320IIR3320N/3320G/ 3350IJ1003	
13	WK1-5148-000		1	BATTERY,LITHIUM,CR2477-HE4H,3V	BAT1001	
14	FS7-8075-000		1	SHORTING CONNECTOR LABEL		
15	FM1-0196-000		1	ETHERNET BOARD PCB ASSEMBLY		
16	FG6-5795-000		1	RISER BOARD-A1		
17	FG3-2959-000		1	LIPS BOARD PCB ASSEMBLY	100V	
18	FG3-2228-000		1	DIMM ASS'Y	100V	
19	FB5-6612-000		1	PLATE, PCB FIXING	100V	
20	FG3-2772-000		1	CD-ROM, USER SOFTWARE	100V	
20	FH5-3378-000		1	USER SOFT WEAR CD-ROM US/UK	120V	
20	FH5-3379-000		1	USER SOFT WEAR CD-ROM FRN/SPN	220/240V	
21	FG3-2484-000		1	CD-ROM, N/W SCANGEAR	100V	
21	FH5-3387-000		1	N/W SCAN GEAR CD-ROM	120/220/240V	

FIGURE & KEY NO.	PARTS NUMBER	RANK	Q'TY	DESCRIPTION	SERIAL NUMBER/ REMARKS	SVC
22	FG3-3057-000		1	CD-ROM, FAX DRIVER	120V	
22	FG3-3057-000		1	CD-ROM, FAX DRIVER	220/240V	
23	FH5-3380-000		1	USER SOFT WEAR CD-ROM GRM/ITY		
501	XB1-2300-607		10	SCREW,MACH.,TRUSS HEAD,M3X6		
502	XB4-7400-807		2	SCREW,TAPPING,TRUSS HEAD,M4X8		
503	XB1-2300-607		8	SCREW,MACH.,TRUSS HEAD,M3X6		
IC1003	FH4-6300-000		1	IC, M38871M2-010GP, MCU		
IC1005	FH4-6145-010		1	IC, GATE ARRAY		
IC1009	FH4-6085-020		1	IC, SLA902FM2J, GATE ARRAY		
IC1010	FH4-6273-000		1	IC, L7A1862, STANDARD SELL		

FIGURE 910
HV POWER SUPPLY PCB ASSEMBLY

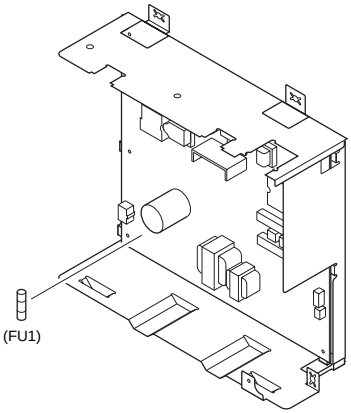

FIGURE & KEY NO.	PARTS NUMBER	RANK	Q'TY	DESCRIPTION	SERIAL NUMBER/ REMARKS	SVC
Fig.910	FG3-1603-000		1	HV POWER SUPPLY PCB ASSEMBLY	100/120V	
Fig.910	FG3-1604-000		1	HV POWER SUPPLY PCB ASSEMBLY	220/240V	
FU1	VD7-0213-151		1	FUSE, 125V, 3.15A	100/120V	
FU1	VD7-0641-601		1	FUSE, 250V, 1.6A	220/240V	

FIGURE 920
CONTROL PANEL INVERTER PCB ASSEMBLY

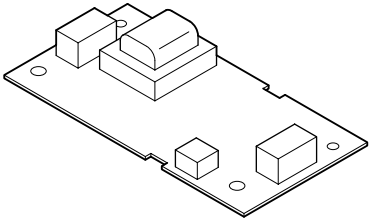

NOTE : This assembly is included in the assembly shown in Figure 130.
注 : このユニットはFigure 130のユニットに含まれます。

FIGURE & KEY NO.	PARTS NUMBER	RANK	Q'TY	DESCRIPTION	SERIAL NUMBER/ REMARKS	SVC
Fig.920	FG6-7738-000		1	CONT.PANEL INVERTER PCB ASS'Y	SEE NOTE	

FIGURE 921
CONTROL PANEL CPU PCB ASSEMBLY

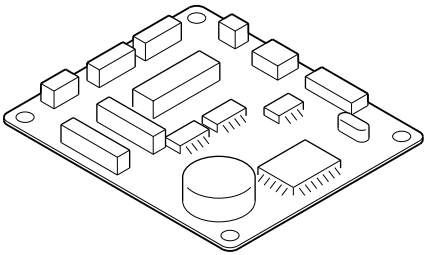

NOTE : This assembly is included in the assembly shown in Figure 130.
注 : このユニットはFigure 130のユニットに含まれます。

FIGURE & KEY NO.	PARTS NUMBER	RANK	Q'TY	DESCRIPTION	SERIAL NUMBER/ REMARKS	SVC
Fig.921	FG3-1795-000		1	CONTROL PANEL CPU PCB ASSEMBLY	SEE NOTE	
Q6822	FK2-0244-000		1	IC,N010-0559-V123,MPU		

FIGURE 922
CONTROL PANEL PCB ASSEMBLY

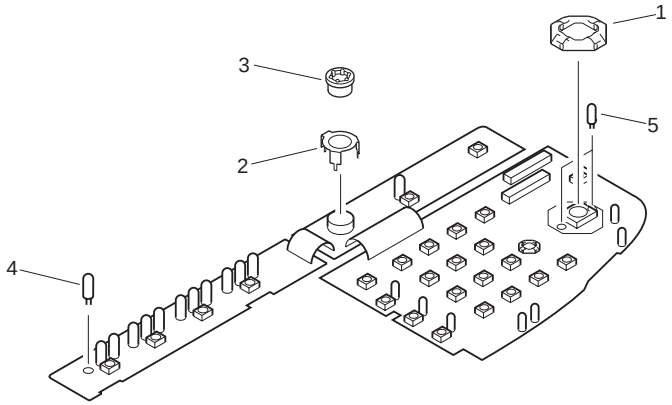

NOTE : This assembly is included in the assembly shown in Figure 130.
注：このユニットはFigure 130のユニットに含まれます。

FIGURE & KEY NO.	PARTS NUMBER	RANK	Q'TY	DESCRIPTION	SERIAL NUMBER/ REMARKS	SVC
Fig.922	FG3-3360-000		1	CONTROL PANEL PCB ASS'Y	SEE NOTE	
1	FB5-2295-000		1	HOLDER, LED		
2	FB3-8320-000		1	PLATE, GROUNDING		
3	FB5-3718-000		1	KNOB,CONTRAST		
4	WG1-5301-000		19	LED,SEL6410E		
5	WG1-5525-000		2	LED,SEL6810A		

FIGURE 930
DC CONTROLLER PCB ASSEMBLY

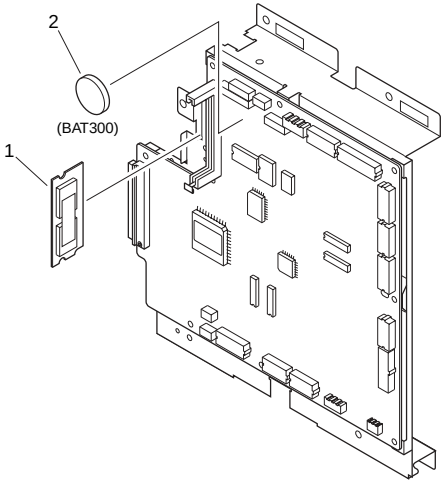

FIGURE & KEY NO.	PARTS NUMBER	RANK	Q'TY	DESCRIPTION	SERIAL NUMBER/ REMARKS	SVC
Fig.930	FG3-1998-020		1	DC CONTROLLER PCB ASSEMBLY	100/120V	
Fig.930	FG3-1999-020		1	DC CONTROLLER PCB ASSEMBLY	220/240V	
1	FG3-1620-120		1	DIMM ASSEMBLY		
2	WK1-5147-000		1	BATTERY, 3V, 550 MAH	BAT300	
FU300	VD7-0602-001		1	FUSE, 72V, 2A		
FU301	VD7-0602-001		1	FUSE, 72V, 2A		
FU302	VD7-0602-501		1	FUSE, 72V, 2.5A		
FU303	VD7-0602-001		1	FUSE, 72V, 2A		
FU304	VD7-0602-001		1	FUSE, 72V, 2A		
IC309	FH4-6300-000		1	IC, M38871M2-010GP, MCU		
IC315	WA4-7181-000		1	IC, MTD2003B-4101, DRIVER		
IC316	WA4-7264-000		1	IC, MTD2003B-4101, DRIVER		
IC334	FH4-6141-000		1	IC, KS4H9U1219WEP, GATE ARRAY		

FIGURE 940
PAPER PICK-UP PCB ASSEMBLY

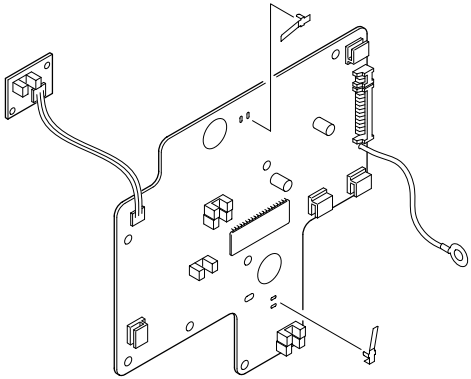

FIGURE & KEY NO.	PARTS NUMBER	RANK	Q'TY	DESCRIPTION	SERIAL NUMBER/ REMARKS	SVC
Fig.940	FG6-0455-000		1	PAPER PICK-UP PCB ASSEMBLY		
FU1601	VD7-0792-501		1	FUSE, 125V, 2.5A		
IC1601	FH4-6002-000		1	IC, MTD2003B-4102, DRIVER		
Q1604	FH9-0585-000		1	PHOTO-INTERRUPTER		
Q1605	FH9-0585-000		1	PHOTO-INTERRUPTER		
Q1606	FH9-0585-000		1	PHOTO-INTERRUPTER		
Q1607	FH9-0585-000		1	PHOTO-INTERRUPTER		
Q1608	FH9-0585-000		1	PHOTO-INTERRUPTER		
Q1609	FH9-0585-000		1	PHOTO-INTERRUPTER		

FIGURE 950
RESOLUTION CONVERSION PCB ASSEMBLY

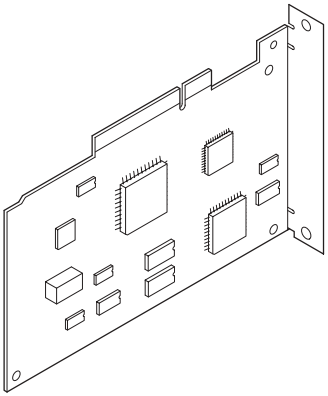

FIGURE & KEY NO.	PARTS NUMBER	RANK	Q'TY	DESCRIPTION	SERIAL NUMBER/ REMARKS	SVC
Fig.950	FG6-6069-000		1	RESOLUTION CONV. PCB ASS'Y		
IC3	FH4-6208-050		1	IC, EPM7032AETC44-4, ASIC		
IC4	FH4-6258-000		1	IC, MB87L1791, GATE ARRAY		
IC8	FH4-6257-000		1	IC, UPD65948GN-053-LMU		

FIGURE B1
LIST OF CONNECTORS

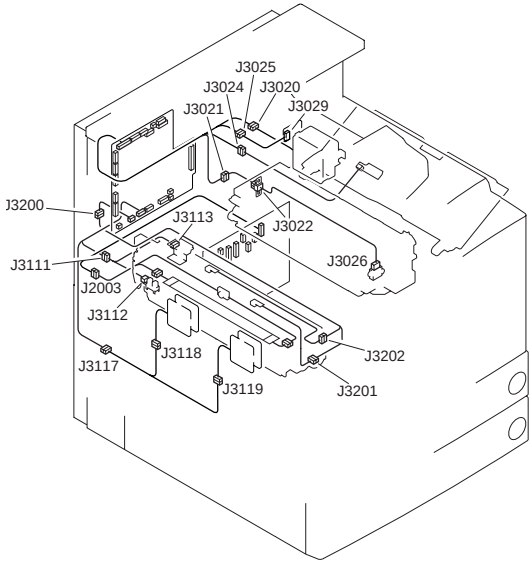

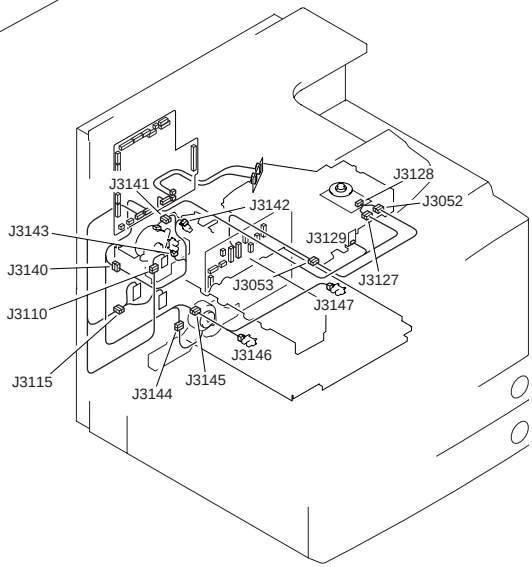

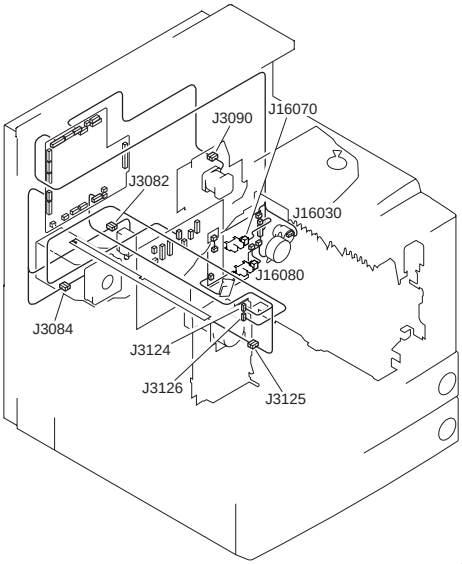
J3090
J16070
J3082
J16030
J16080
J3084
J3124
J3126
J3125

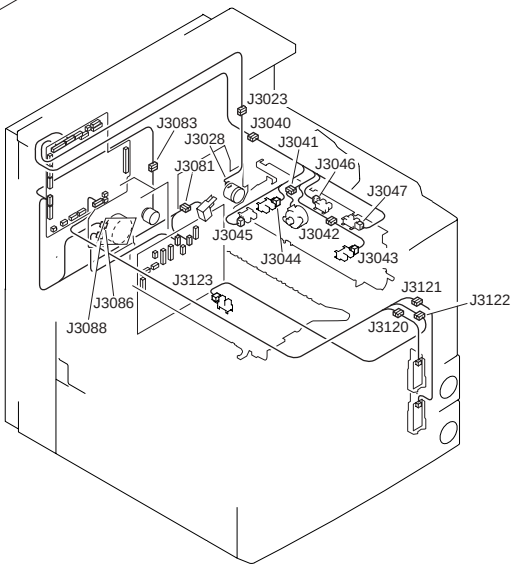
J3023
J3083
J3040
J3028
J3041
J3081
J3046
J3047
J3045
J3042
J3044
J3043
J3123
J3121
J3122
J3086
J3088
J3120

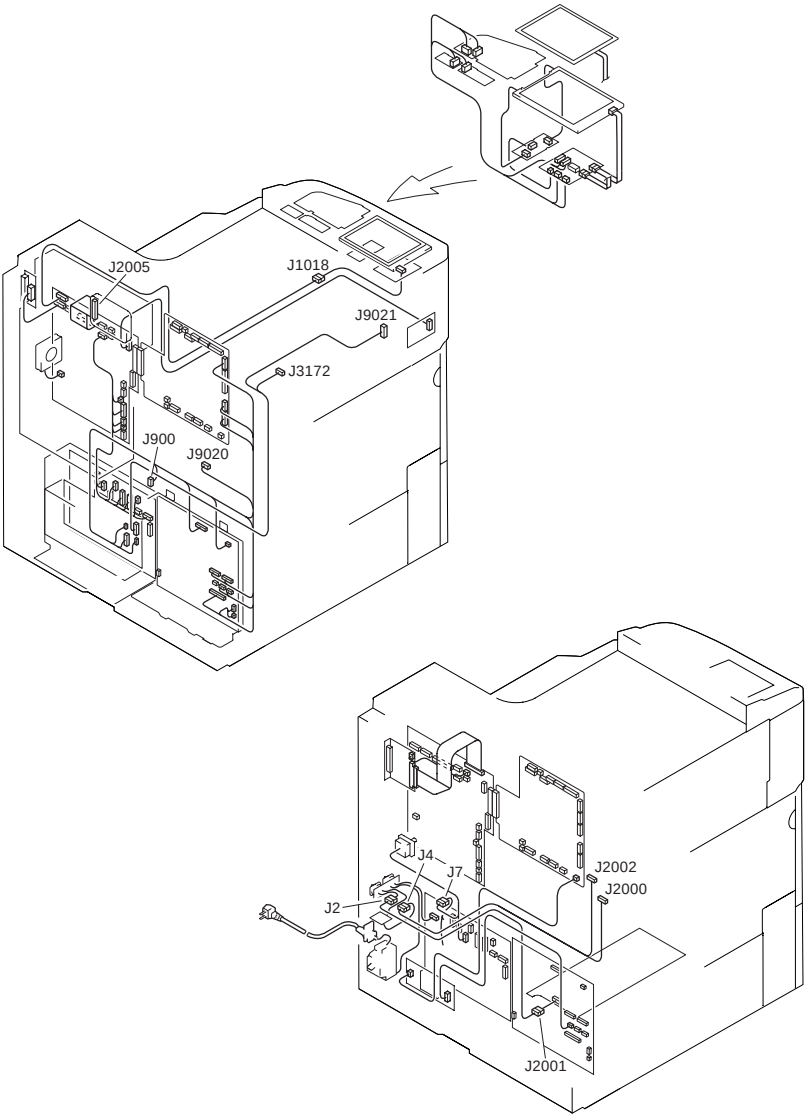

FIGURE & KEY NO.	PARTS NUMBER	RANK	Q'TY	DESCRIPTION	SERIAL NUMBER/ REMARKS	SVC
Fig.B1	NPN		RF	LIST OF CONNECTORS		
J1	PCB			CONTROL PANEL INVERTER		

FIGURE & KEY NO.	PARTS NUMBER	RANK	Q'TY	DESCRIPTION	SERIAL NUMBER/ REMARKS	SVC
J1	VS1-7178-002		1	CONNECTOR, 2P, FEMALE		
J2	PCB			CONTROL PANEL INVERTER		
J2	NPN			LCD CONTROL PANEL		
J2	PCB			SWITCH		
J2	VS4-0001-004		1	CONNECTOR, 4P, MALE		
J2	WS4-0219-000		4	PIN CONTACT, 18-22AWG		
J2	SYS			READER		
J2	FH2-6855-000		1	CONNECTOR, 12P, FEMALE		
J2	FH2-5825-000		5	PIN CONTACT, 16-20AWG		
J3	PCB			CONTROL PANEL INVERTER		
J3	NPN			LCD CONTROL PANEL		
J4	PCB			ARRESTER		
J4	VS4-0001-002		1	CONNECTOR, 2P, MALE		
J4	WS4-0219-000		2	PIN CONTACT, 18-22AWG		
J4	SYS			NEW CARD READER	ACCESSORY	
J4	VS1-6314-005		1	CONNECTOR, 5P, FEMALE		
J5	PCB			MAIN POWER SUPPLY		
J5	PCB			ACCESSORY POWER SUPPLY	ACC TYPE/ACCESSORY	
J6	PCB			MAIN POWER SUPPLY		
J6	PCB			SWITCH		
J7	PCB			MAIN POWER SUPPLY		
J7	VS3-5116-006		1	CONNECTOR, 6P, FEMALE		
J7	WS3-5174-000		4	SOCKT CONTACT,16-20AWG		
J8	PCB			MAIN POWER SUPPLY		
J8	WS3-5399-000		1	CONNECTOR, 5P, MALE		
J8	WS3-5174-000		3	SOCKT CONTACT,16-20AWG		
J11	PCB			MAIN CONTROLLER		
J11	PCB			COUNTER		
J20	PCB			SOFT ID		
J20	VS1-6314-011		1	CONNECTOR, 11P, FEMALE		
J21	VS1-5824-002		1	CONNECTOR, 2P, FEMALE		
J21	VS1-6321-002		1	CONNECTOR, 2P, FEMALE		

FIGURE & KEY NO.	PARTS NUMBER	RANK	Q'TY	DESCRIPTION	SERIAL NUMBER/ REMARKS	SVC
J21	WS3-5358-000		2	SOCKET CONTACT, 22-26AWG		
J21	VS1-7177-002		1	CONNECTOR, SNAP TIGHT		
J47	SYS			ASSIST	ACCESSORY	
J47	VS1-6321-008		1	CONNECTOR, 8P, FEMALE		
J100	PCB			HV POWER SUPPLY		
J100	PCB			MAIN POWER SUPPLY		
J110	VS1-6314-003		1	CONNECTOR, 3P, MALE		
J110	PCB			HV POWER SUPPLY		
J111	PCB			HV POWER SUPPLY		
J111	VS1-6314-006		1	CONNECTOR, 6P, FEMALE		
J120	PCB			HV POWER SUPPLY		
J120	VS3-5083-004		1	CONNECTOR, 4P, FEMALE		
J120	WS3-5160-000		2	SOCKET CONTACT, 18-24AWG		
J121	PCB			HV POWER SUPPLY		
J121	VS1-6302-015		1	CONNECTOR, 15P, MALE		
J121	WS3-5569-000		15	PIN, CONTACT		
J122	PCB			HV POWER SUPPLY		
J122	VS1-6302-004		1	CONNECTOR, 4P, MALE		
J122	WS3-5569-000		4	PIN, CONTACT		
J124	PCB			HV POWER SUPPLY		
J124	VS1-6302-010		1	CONNECTOR, 10P, FEMALE		
J124	WS3-5569-000		10	PIN, CONTACT		
J126	PCB			HV POWER SUPPLY		
J126	VS1-6302-009		1	CONNECTOR, 9P, MALE		
J126	WS3-5569-000		6	PIN, CONTACT		
J127	PCB			HV POWER SUPPLY		
J127	VS1-6302-002		1	CONNECTOR, 2P, MALE	220/240V	
J127	WS3-5569-000		2	PIN, CONTACT	220/240V	
J130	PCB			HV POWER SUPPLY		
J130	VS3-5083-007		1	CONNECTOR, 7P, FEMALE		
J130	WS3-5160-000		2	SOCKET CONTACT, 18-24AWG		
J131	PCB			HV POWER SUPPLY		

FIGURE & KEY NO.	PARTS NUMBER	RANK	Q'TY	DESCRIPTION	SERIAL NUMBER/ REMARKS	SVC
J131	VS3-5083-005		1	CONNECTOR, 5P, FEMALE		
J131	WS3-5160-000		1	SOCKET CONTACT, 18-24AWG		
J135	PCB			HV POWER SUPPLY		
J135	VS3-5083-002		1	CONNECTOR, 2P, FEMALE		
J135	WS3-5160-000		2	SOCKET CONTACT, 18-24AWG		
J136	PCB			HV POWER SUPPLY		
J136	VT2-5162-024		1	HOLDER, CONNECTOR, 24P		
J136	VS1-6320-012		1	CONNECTOR, 12P, MALE		
J136	VS1-6321-012		1	CONNECTOR, 12P, MALE		
J200	PCB			MAIN POWER SUPPLY		
J200	VS3-5083-003		1	CONNECTOR, 3P, FEMALE		
J200	WS3-5160-000		2	SOCKET CONTACT, 18-24AWG		
J201	PCB			MAIN POWER SUPPLY		
J201	VS1-6314-003		1	CONNECTOR, 3P, MALE		
J202	PCB			MAIN POWER SUPPLY		
J202	VS3-5083-006		1	CONNECTOR, 6P, FEMALE		
J202	WS3-5160-000		6	SOCKET CONTACT, 18-24AWG		
J203	PCB			MAIN POWER SUPPLY		
J203	VS3-5083-007		1	CONNECTOR, 7P, FEMALE		
J203	WS3-5160-000		6	SOCKET CONTACT, 18-24AWG		
J204	PCB			MAIN POWER SUPPLY		
J204	VS3-5083-010		1	CONNECTOR, 10P, FEMALE		
J204	WS3-5160-000		8	SOCKET CONTACT, 18-24AWG		
J205	PCB			MAIN POWER SUPPLY		
J205	VS1-6321-008		1	CONNECTOR, 8P, FEMALE		
J208	PCB			MAIN POWER SUPPLY		
J208	VS1-6321-007		1	CONNECTOR, 7P, FEMALE		
J300	PCB			DC CONTROLLER		
J300	VS3-5083-008		1	CONNECTOR, 8P, FEMALE		
J300	WS3-5160-000		8	SOCKET CONTACT, 18-24AWG		
J301	PCB			DC CONTROLLER		
J301	VT2-5161-026		1	HOLDER, CONNECTOR, 26P		

FIGURE & KEY NO.	PARTS NUMBER	RANK	Q'TY	DESCRIPTION	SERIAL NUMBER/ REMARKS	SVC
J301	VS1-6313-013		1	CONNECTOR, 13P, FEMALE		
J301	VS1-6314-013		1	CONNECTOR, 13P, FEMALE		
J302	PCB			DC CONTROLLER		
J302	VT2-5161-036		1	HOLDER, CONNECTOR, 36P		
J302	VS1-6313-018		1	CONNECTOR, 18P, FEMALE		
J302	VS1-6314-018		1	CONNECTOR, 18P, MALE		
J304	PCB			DC CONTROLLER		
J304	VT2-5161-024		1	CONNECTOR, 24P, FEMALE		
J304	VS1-6313-012		1	CONNECTOR, 12P, FEMALE		
J304	VS1-6314-012		1	CONNECTOR, 12P, FEMALE		
J307	PCB			DC CONTROLLER		
J307	VS1-6314-004		1	CONNECTOR, 4P, FEMALE		
J308	PCB			DC CONTROLLER		
J308	VT2-5161-020		1	HOLDER, CONNECTOR, 20P		
J308	VS1-6313-010		1	CONNECTOR, 10P, FEMALE		
J308	VS1-6314-010		1	CONNECTOR, 10P, FEMALE		
J309	PCB			DC CONTROLLER		
J309	VS1-6302-006		1	CONNECTOR, 6P, MALE		
J309	WS3-5569-000		6	PIN, CONTACT		
J310	PCB			DC CONTROLLER		
J310	VS1-6314-005		1	CONNECTOR, 5P, FEMALE		
J311	PCB			DC CONTROLLER		
J311	VT2-5161-018		1	HOLDER, CONNECTOR, 18P		
J311	VS1-6313-009		1	CONNECTOR, 9P, FEMALE		
J311	VS1-6314-009		1	CONNECTOR, 9P, FEMALE		
J312	PCB			DC CONTROLLER		
J312	VT2-5161-030		1	HOLDER, CONNECTOR, 30P		
J312	VS1-6313-015		1	CONNECTOR, 15P, FEMALE		
J312	VS1-6314-015		1	CONNECTOR, 15P, FEMALE		
J313	PCB			DC CONTROLLER		
J313	VT2-5161-024		1	CONNECTOR, 24P, FEMALE		
J313	VS1-6313-012		1	CONNECTOR, 12P, FEMALE		

FIGURE & KEY NO.	PARTS NUMBER	RANK	Q'TY	DESCRIPTION	SERIAL NUMBER/ REMARKS	SVC
J313	VS1-6314-012		1	CONNECTOR, 12P, FEMALE		
J314	PCB			DC CONTROLLER		
J314	VT2-5161-020		1	HOLDER, CONNECTOR, 20P		
J314	VS1-6313-010		1	CONNECTOR, 10P, FEMALE		
J314	VS1-6314-010		1	CONNECTOR, 10P, FEMALE		
J315	PCB			DC CONTROLLER		
J315	VT2-5161-022		1	HOLDER, CONNECTOR, 22P		
J315	VS1-6313-011		1	CONNECTOR, 11P, FEMALE		
J315	VS1-6314-011		1	CONNECTOR, 11P, FEMALE		
J316	PCB			DC CONTROLLER		
J316	PCB			MAIN CONTROLLER		
J320	PCB			DC CONTROLLER		
J320	VS1-6302-004		1	CONNECTOR, 4P, MALE		
J320	WS3-5569-000		4	PIN, CONTACT		
J332	PCB			DC CONTROLLER		
J332	VS1-6302-002		1	CONNECTOR, 2P, MALE	220/240V	
J332	WS3-5569-000		2	PIN, CONTACT	220/240V	
J500	PCB			LASER DRIVER		
J500	VS1-6313-004		1	CONNECTOR, 4P, FEMALE		
J501	PCB			LASER DRIVER		
J501	VS1-6313-005		1	CONNECTOR, 5P, FEMALE		
J701	PCB			ACCESSORY POWER SUPPLY	ACC TYPE/ACCESSORY	
J701	VS1-6314-003		1	CONNECTOR, 3P, MALE		
J702	PCB			ACCESSORY POWER SUPPLY	ACC TYPE/ACCESSORY	
J702	VS3-5083-004		1	CONNECTOR, 4P, FEMALE		
J702	WS3-5160-000		4	SOCKET CONTACT, 18-24AWG		
J707	PCB			ACCESSORY POWER SUPPLY	ACC TYPE/ACCESSORY	
J707	VS1-6321-004		1	CONNECTOR, 4P, FEMALE		
J708	PCB			ACCESSORY POWER SUPPLY	ACC TYPE/ACCESSORY	
J708	VS1-6321-007		1	CONNECTOR, 7P, FEMALE		
J712	PCB			PSEUDO CI	FAX TYPE/ACCESSORY	
J712	VS1-6314-004		1	CONNECTOR, 4P, FEMALE		

FIGURE & KEY NO.	PARTS NUMBER	RANK	Q'TY	DESCRIPTION	SERIAL NUMBER/ REMARKS	SVC
J713	PCB			PSEUDO CI	FAX TYPE/ACCESSORY	
J713	VS3-5083-002		1	CONNECTOR, 2P, FEMALE		
J713	WS3-5160-000		2	SOCKET CONTACT, 18-24AWG		
J716	PCB			THERMISTOR SEP. POWER SUPPLY	220/240V	
J716	VS1-6302-002		1	CONNECTOR, 2P, MALE	220/240V	
J716	WS3-5569-000		2	PIN, CONTACT	220/240V	
J717	PCB			THERMISTOR SEP. POWER SUPPLY	220/240V	
J717	VS1-6302-003		1	CONNECTOR, 3P, FEMALE	220/240V	
J717	WS3-5569-000		2	PIN, CONTACT	220/240V	
J900	SYS			G3 FAX UNIT	FAX TYPE/ACCESSORY	
J900	VS1-6302-010		1	CONNECTOR, 10P, FEMALE		
J900	WS3-5569-000		10	PIN, CONTACT		
J1011	PCB			MAIN CONTROLLER		
J1011	PCB			ETHERNET BOARD	PRINTER/LIPS TYPE	
J1015	PCB			MAIN CONTROLLER		
J1015	VS1-6407-080		1	CONNECTOR, 80P, FEMALE		
J1017	PCB			MAIN CONTROLLER		
J1017	FH2-7197-000		1	CABLE, FLAT, HD		
J1018	PCB			MAIN CONTROLLER		
J1018	VT2-5161-036		1	HOLDER, CONNECTOR, 36P		
J1018	VS1-6313-018		1	CONNECTOR, 18P, FEMALE		
J1018	VS1-6314-018		1	CONNECTOR, 18P, MALE		
J1019	PCB			MAIN CONTROLLER		
J1019	VT2-5161-026		1	HOLDER, CONNECTOR, 26P		
J1019	VS1-6313-013		1	CONNECTOR, 13P, FEMALE		
J1019	VS1-6314-013		1	CONNECTOR, 13P, FEMALE		
J1020	PCB			MAIN CONTROLLER		
J1020	VS1-6302-015		1	CONNECTOR, 15P, MALE		
J1020	WS3-5569-000		15	PIN, CONTACT		
J1021	PCB			MAIN CONTROLLER		
J1021	VS1-6314-003		1	CONNECTOR, 3P, MALE		
J1022	PCB			MAIN CONTROLLER		

FIGURE & KEY NO.	PARTS NUMBER	RANK	Q'TY	DESCRIPTION	SERIAL NUMBER/ REMARKS	SVC
J1022	VS1-6321-006		1	CONNECTOR, 6P, FEMALE		
J1023	PCB			MAIN CONTROLLER		
J1023	VS1-6314-011		1	CONNECTOR, 11P, FEMALE		
J1024	PCB			MAIN CONTROLLER		
J1024	VS1-6314-010		1	CONNECTOR, 10P, FEMALE		
J1027	PCB			MAIN CONTROLLER		
J1027	VS1-6302-002		1	CONNECTOR, 2P, MALE		
J1027	WS3-5569-000		2	PIN, CONTACT		
J1028	PCB			MAIN CONTROLLER		
J1028	NPN			CONTROLLER BOX FAN	FM3	
J1050	PCB			CENTRO		
J1050	VT2-5161-026		1	HOLDER, CONNECTOR, 26P		
J1050	VS1-6313-013		1	CONNECTOR, 13P, FEMALE		
J1050	VS1-6314-013		1	CONNECTOR, 13P, FEMALE		
J1058	PCB			MAIN CONTROLLER		
J1058	VS1-6302-004		1	CONNECTOR, 4P, MALE		
J1058	WS3-5569-000		4	PIN, CONTACT		
J1059	PCB			MAIN CONTROLLER		
J1059	VS1-6314-004		1	CONNECTOR, 4P, FEMALE		
J1060	PCB			MAIN CONTROLLER		
J1060	VS1-7178-004		1	CONNECTOR, 4P, FEMALE		
J1061	PCB			MAIN CONTROLLER		
J1061	VS1-6314-004		1	CONNECTOR, 4P, FEMALE		
J1101	PCB			CONTROL PANEL KEY		
J1101	VS1-6314-011		1	CONNECTOR, 11P, FEMALE		
J1102	PCB			CONTROL PANEL KEY		
J1102	VS1-6314-010		1	CONNECTOR, 10P, FEMALE		
J1103	PCB			CONTROL PANEL KEY		
J1103	VS1-6314-008		1	CONNECTOR, 8P, FEMALE		
J1104	PCB			CONTROL PANEL KEY		
J1104	VS1-6314-006		1	CONNECTOR, 6P, FEMALE		
J1601	PCB			PAPER PICK-UP		

FIGURE & KEY NO.	PARTS NUMBER	RANK	Q'TY	DESCRIPTION	SERIAL NUMBER/ REMARKS	SVC
J1601	VS1-6314-018		1	CONNECTOR, 18P, MALE		
J1602	PCB			PAPER PICK-UP		
J1602	NPN			PAPER PICK-UP MOTOR	M2	
J1603	PCB			PAPER PICK-UP		
J1603	VS1-6321-004		1	CONNECTOR, 4P, FEMALE		
J1604	PCB			PAPER PICK-UP		
J1604	NPN			PAPER FEED DOWN SOLENOID	SL1	
J1607	PCB			PAPER PICK-UP		
J1607	VS1-6321-003		1	CONNECTOR, 3P, FEMALE		
J1608	PCB			PAPER PICK-UP		
J1608	VS1-6321-003		1	CONNECTOR, 3P, FEMALE		
J2000	VS4-0002-002		1	CONNECTOR, 2P, FEMALE		
J2000	WS4-0217-000		2	SOCKET CONTACT, 22-18AWG		
J2001	NPN			CASSETTE HEATER	ACCESSORY 100V H3	
J2001	VS4-0002-002		1	CONNECTOR, 2P, FEMALE		
J2001	WS4-0217-000		2	SOCKET CONTACT, 22-18AWG		
J2002	SYS			G3 FAX UNIT	FAX TYPE/ACCESSORY	
J2002	VS4-0001-002		1	CONNECTOR, 2P, MALE		
J2002	WS4-0219-000		2	PIN CONTACT, 18-22AWG		
J2003	VS3-5121-003		1	CONNECTOR, 3P, MALE		
J2003	VS3-5122-003		1	CONNECTOR, 3P, MALE		
J2003	WS3-5291-000		3	PIN CONTACT		
J2003	WS3-5292-000		3	SOCKET CONTACT		
J2005	NPN			HDD	HD	
J2005	FH2-7197-000		1	CABLE, FLAT, HD		
J2060	SYS			CASSETTE PEDESTAL	ACCESSORY	
J2060	PCB			MAIN POWER SUPPLY		
J3020	NPN			DEVELOPING FAN	FM1	
J3020	VS1-6321-003		1	CONNECTOR, 3P, FEMALE		
J3020	VS1-7177-003		1	CONNECTOR, SNAP TIGHT		
J3021	VS1-5824-003		1	CONNECTOR, 3P, FEMALE		
J3021	VS1-6321-003		1	CONNECTOR, 3P, FEMALE		

FIGURE & KEY NO.	PARTS NUMBER	RANK	Q'TY	DESCRIPTION	SERIAL NUMBER/ REMARKS	SVC
J3021	WS3-5358-000		3	SOCKET CONTACT, 22-26AWG		
J3021	VS1-7177-003		1	CONNECTOR, SNAP TIGHT		
J3022	VS3-0247-004		1	CONNECTOR, 4P, MALE		
J3022	VS3-0248-004		1	CONNECTOR, 4P, FEMALE		
J3022	WS3-5595-000		3	CONTACT		
J3022	WS3-5403-000		3	SOCKET CONTACT		
J3023	VS1-6321-002		2	CONNECTOR, 2P, FEMALE		
J3023	VS1-7177-002		1	CONNECTOR, SNAP TIGHT		
J3024	NPN			MULTI PAPER WIDTH SENSOR	VR1	
J3024	VS1-6321-003		1	CONNECTOR, 3P, FEMALE		
J3024	VS1-7177-003		1	CONNECTOR, SNAP TIGHT		
J3025	VS1-7178-004		1	CONNECTOR, 4P, FEMALE		
J3025	VS1-6321-004		1	CONNECTOR, 4P, FEMALE		
J3025	VS1-7177-004		1	CONNECTOR, SNAP TIGHT		
J3026	NPN			TONER SENSOR	S1	
J3026	VS1-7178-003		1	CONNECTOR, 3P, FEMALE		
J3028	NPN			MULTI CLUTCH	CL2	
J3028	VS1-6314-003		1	CONNECTOR, 3P, MALE		
J3029	NPN			HUMIDITY SENSOR	S3	
J3029	VS1-5452-004		1	CONNECTOR, 4P, FEMALE		
J3040	VT2-5161-024		2	CONNECTOR, 24P, FEMALE		
J3040	VS1-6314-012		2	CONNECTOR, 12P, FEMALE		
J3040	VS1-6313-012		2	CONNECTOR, 12P, FEMALE		
J3040	VS1-6319-024		1	CONNECTOR, SNAP TIGHT		
J3041	NPN			SIDE REGIST MOVE MOTOR	M3	
J3041	VS1-6321-006		1	CONNECTOR, 6P, FEMALE		
J3041	VS1-7440-006		1	CONNECTOR, SNAP TIGHT		
J3042	VS1-5824-003		1	CONNECTOR, 3P, FEMALE		
J3042	VS1-6321-003		1	CONNECTOR, 3P, FEMALE		
J3042	WS3-5358-000		3	SOCKET CONTACT, 22-26AWG		
J3042	VS1-7177-003		1	CONNECTOR, SNAP TIGHT		
J3043	NPN			SIDE REGIST PAPER SENSOR	PS11	

FIGURE & KEY NO.	PARTS NUMBER	RANK	Q'TY	DESCRIPTION	SERIAL NUMBER/ REMARKS	SVC
J3043	VS1-5824-003		1	CONNECTOR, 3P, FEMALE		
J3043	WS3-5358-000		3	SOCKET CONTACT, 22-26AWG		
J3044	NPN			REGIST FRONT PAPER SENSOR	PS10	
J3044	VS1-6321-003		1	CONNECTOR, 3P, FEMALE		
J3045	NPN			PRE. REGIST FRONT PAPER SENSOR	PS9	
J3045	VS1-6321-003		1	CONNECTOR, 3P, FEMALE		
J3046	NPN			RIGHT DOOR OPEN SENSOR	PS23	
J3046	VS1-6320-003		1	CONNECTOR, 3P, MALE		
J3047	NPN			MULTI PAPER SENSOR	PS22	
J3047	VS1-6320-003		1	CONNECTOR, 3P, MALE		
J3052	VS1-5824-002		1	CONNECTOR, 2P, FEMALE		
J3052	VS1-6321-002		1	CONNECTOR, 2P, FEMALE		
J3052	WS3-5358-000		2	SOCKET CONTACT, 22-26AWG		
J3052	VS1-7177-002		1	CONNECTOR, SNAP TIGHT		
J3053	VS1-5729-002		1	CONNECTOR, 2P, MALE		
J3053	VS3-5083-002		1	CONNECTOR, 2P, FEMALE		
J3053	WS3-5301-000		2	PIN CONTACT		
J3053	WS3-5160-000		2	SOCKET CONTACT, 18-24AWG		
J3081	NPN			MULTI PLATE RELEASE SOLENOID	SL5	
J3081	VS1-6321-002		1	CONNECTOR, 2P, FEMALE		
J3081	VS1-7177-002		1	CONNECTOR, SNAP TIGHT		
J3082	NPN			CORONA ROLLER SOLENOID	SL6	
J3082	VS1-6321-002		1	CONNECTOR, 2P, FEMALE		
J3082	VS1-7177-002		1	CONNECTOR, SNAP TIGHT		
J3083	NPN			DEVELOPING CLUTCH	CL3	
J3083	VS1-6321-002		1	CONNECTOR, 2P, FEMALE		
J3083	VS1-7177-002		1	CONNECTOR, SNAP TIGHT		
J3084	NPN			FIXING FAN	FM2	
J3084	VS1-6321-003		1	CONNECTOR, 3P, FEMALE		
J3084	VS1-7177-003		1	CONNECTOR, SNAP TIGHT		
J3086	NPN			MAIN MOTOR	M1	
J3086	VS1-6321-004		1	CONNECTOR, 4P, FEMALE		

FIGURE & KEY NO.	PARTS NUMBER	RANK	Q'TY	DESCRIPTION	SERIAL NUMBER/ REMARKS	SVC
J3088	NPN			MAIN MOTOR	M1	
J3088	VS3-5083-003		1	CONNECTOR, 3P, FEMALE		
J3088	WS3-5160-000		2	SOCKET CONTACT, 18-24AWG		
J3090	NPN			REGIST MOTOR	M9	
J3090	VS1-6302-006		1	CONNECTOR, 6P, MALE		
J3090	WS3-5569-000		6	PIN, CONTACT		
J3110	PCB			DRUM SENSOR		
J3110	VS1-6321-002		1	CONNECTOR, 2P, FEMALE		
J3111	VS1-6321-006		2	CONNECTOR, 6P, FEMALE		
J3111	VS1-7440-006		1	CONNECTOR, SNAP TIGHT		
J3112	NPN			FIXING/FEEDER SENSOR	PS13	
J3112	VS1-6321-003		1	CONNECTOR, 3P, FEMALE		
J3113	NPN			FIXING FILM SENSOR	PS26	
J3113	VS1-6321-003		1	CONNECTOR, 3P, FEMALE		
J3115	NPN			WASTE TONER SENSOR	S2	
J3115	VS1-6321-004		1	CONNECTOR, 4P, FEMALE		
J3115	VS1-7177-004		1	CONNECTOR, SNAP TIGHT		
J3117	VS1-6321-006		2	CONNECTOR, 6P, FEMALE		
J3117	VS1-7440-006		1	CONNECTOR, SNAP TIGHT		
J3118	NPN			CURL CORRECT FAN 1	FM4	
J3118	VS1-6321-003		1	CONNECTOR, 3P, FEMALE		
J3118	VS1-7177-003		1	CONNECTOR, SNAP TIGHT		
J3119	NPN			CURL CORRECT FAN 2	FM5	
J3119	VS1-6321-003		1	CONNECTOR, 3P, FEMALE		
J3119	VS1-7177-003		1	CONNECTOR, SNAP TIGHT		
J3120	NPN			UPPER CASSETTE SIZE SENSOR		
J3120	VS1-6321-007		1	CONNECTOR, 7P, FEMALE		
J3120	VS1-7177-007		1	CONNECTOR, SNAP TIGHT		
J3121	NPN			LOWER CASSETTE SIZE SENSOR		
J3121	VS1-6321-006		1	CONNECTOR, 6P, FEMALE		
J3121	VS1-7440-006		1	CONNECTOR, SNAP TIGHT		
J3122	VS1-6321-003		2	CONNECTOR, 3P, FEMALE		

FIGURE & KEY NO.	PARTS NUMBER	RANK	Q'TY	DESCRIPTION	SERIAL NUMBER/ REMARKS	SVC
J3122	VS1-7177-003		1	CONNECTOR, SNAP TIGHT		
J3123	NPN			PAPER TOP SENSOR	PS12	
J3123	VS1-6321-003		1	CONNECTOR, 3P, FEMALE		
J3124	NPN			FIXING MOTOR	M4	
J3124	VS1-6321-005		1	CONNECTOR, 5P, FEMALE		
J3125	NPN			PRECONDITIONING LAMP	LAMP2	
J3125	VS1-6321-002		1	CONNECTOR, 2P, FEMALE		
J3125	VS1-7177-002		1	CONNECTOR, SNAP TIGHT		
J3126	NPN			FIXING MOTOR	M4	
J3126	VS3-5083-003		1	CONNECTOR, 3P, FEMALE		
J3126	WS3-5160-000		2	SOCKET CONTACT, 18-24AWG		
J3127	VS1-6321-003		2	CONNECTOR, 3P, FEMALE		
J3127	VS1-7177-003		1	CONNECTOR, SNAP TIGHT		
J3128	VS1-6314-005		1	CONNECTOR, 5P, FEMALE		
J3128	NPN			POLYGON MOTOR	M10	
J3129	NPN			BEAM DETECT	BD	
J3129	VS1-6321-004		1	CONNECTOR, 4P, FEMALE		
J3130	SYS			FIN-J1/INNER 2 WAY TRAY-A1	ACCESSORY	
J3130	VS1-6321-012		1	CONNECTOR, 12P, MALE		
J3130	VS1-7177-012		1	CONNECTOR, SNAP TIGHT		
J3140	VS1-6321-010		2	CONNECTOR, 10P, FEMALE		
J3140	VS1-7177-010		1	CONNECTOR, SNAP TIGHT		
J3141	NPN			PAPER DELIVERY MOTOR	M5	
J3141	VS1-6321-004		1	CONNECTOR, 4P, FEMALE		
J3141	VS1-7177-004		1	CONNECTOR, SNAP TIGHT		
J3142	NPN			PAPER DELIVERY 1 FULL SENSOR	PS16	
J3142	VS1-6321-003		1	CONNECTOR, 3P, FEMALE		
J3143	NPN			PAPER DELIVERY 1 PAPER SENSOR	PS15	
J3143	VS1-6320-003		1	CONNECTOR, 3P, MALE		
J3144	NPN			DUPLEXING MOTOR	M6	
J3144	VS1-6321-004		1	CONNECTOR, 4P, FEMALE		
J3144	VS1-7177-004		1	CONNECTOR, SNAP TIGHT		

FIGURE & KEY NO.	PARTS NUMBER	RANK	Q'TY	DESCRIPTION	SERIAL NUMBER/ REMARKS	SVC
J3145	VS1-6321-006		2	CONNECTOR, 6P, FEMALE		
J3145	VS1-7440-006		1	CONNECTOR, SNAP TIGHT		
J3146	NPN			DUPLEXING INLET PAPER SENSOR	PS17	
J3146	VS1-6321-003		1	CONNECTOR, 3P, FEMALE		
J3147	NPN			DUPLEXING OUTLET PAPER SENSOR	PS18	
J3147	VS1-6321-003		1	CONNECTOR, 3P, FEMALE		
J3151	VS1-7177-004		1	CONNECTOR, SNAP TIGHT		
J3151	VS1-6321-004		1	CONNECTOR, 4P, FEMALE		
J3172	SYS			FINISHER-J1	ACCESSORY	
J3172	VS1-5729-004		1	CONNECTOR, 4P, MALE		
J3172	WS3-5301-000		4	PIN CONTACT		
J3200	VS1-6302-004		1	CONNECTOR, 4P, MALE		
J3200	VS1-6702-004		1	CONNECTOR, 4P, FEMALE		
J3200	WS3-5720-000		4	SOCKET CONTACT, 22-28AWG		
J3200	WS3-5569-000		4	PIN, CONTACT		
J3201	NPN			MAIN THERMISTOR	TH1	
J3201	RH2-5317-000		1	CONNECTOR, 2P, MALE		
J3201	RH2-5281-000		2	PIN CONTACT, 26AWG		
J3202	NPN			SUB THERMISTOR	TH2	
J3202	VS1-5824-002		1	CONNECTOR, 2P, FEMALE		
J3202	WS3-5358-000		2	SOCKET CONTACT, 22-26AWG		
J3202	VS1-7177-002		1	CONNECTOR, SNAP TIGHT		
J3900	SYS			FIN-J1/INNER 2 WAY TRAY-A1		
J3900	VS1-6321-013		1	CONNECTOR, 13P, FEMALE		
J3900	VS1-7177-013		1	CONNECTOR, SNAP TIGHT		
J4101	VS1-5729-004		1	CONNECTOR, 4P, MALE		
J4101	VS3-5083-004		1	CONNECTOR, 4P, FEMALE		
J4101	WS3-5301-000		4	PIN CONTACT		
J4101	WS3-5160-000		4	SOCKET CONTACT, 18-24AWG		
J6801	PCB			CONTROL PANEL CPU		
J6801	VT2-5161-036		1	HOLDER, CONNECTOR, 36P		
J6801	VS1-6313-018		1	CONNECTOR, 18P, FEMALE		

FIGURE & KEY NO.	PARTS NUMBER	RANK	Q'TY	DESCRIPTION	SERIAL NUMBER/ REMARKS	SVC
J6801	VS1-6314-018		1	CONNECTOR, 18P, MALE		
J6803	PCB			CONTROL PANEL CPU		
J6803	NPN			ANALOG TOUCH PANEL		
J6804	PCB			CONTROL PANEL CPU		
J6804	VS1-7178-003		1	CONNECTOR, 3P, FEMALE		
J6805	PCB			CONTROL PANEL CPU		
J6805	VS1-6314-010		1	CONNECTOR, 10P, FEMALE		
J6806	PCB			CONTROL PANEL CPU		
J6806	VS1-6314-011		1	CONNECTOR, 11P, FEMALE		
J6807	PCB			CONTROL PANEL CPU		
J6807	VS1-6314-006		1	CONNECTOR, 6P, FEMALE		
J6808	PCB			CONTROL PANEL CPU		
J6808	VS1-6314-008		1	CONNECTOR, 8P, FEMALE		
J7040	SYS			HFS	ACCESSORY	
J7040	PCB			ACCESSORY POWER SUPPLY	ACC TYPE/ACCESSORY	
J7050	SYS			2.5K SIDE PAPER DECK	ACCESSORY	
J7050	PCB			ACCESSORY POWER SUPPLY	ACC TYPE/ACCESSORY	
J7100	SYS			G4 FAX UNIT	ACCESSORY	
J7100	VS1-6534-002		1	CONNECTOR, 2P, MALE		
J7100	WS3-5658-000		2	SOCKET CONTACT		
J9020	SYS			G3 FAX UNIT	FAX TYPE/ACCESSORY	
J9020	VS1-6321-002		1	CONNECTOR, 2P, FEMALE		
J9021	VS1-6321-002		1	CONNECTOR, 2P, FEMALE		
J9021	VS1-7177-002		1	CONNECTOR, SNAP TIGHT		
J9201	PCB			DIFFERENTIAL		
J9201	VS1-6407-080		1	CONNECTOR, 80P, FEMALE		
J9202	SYS			READER		
J9202	PCB			DIFFERENTIAL		
J9203	PCB			DIFFERENTIAL		
J9203	VS1-6314-004		1	CONNECTOR, 4P, FEMALE		
J9801	NPN			LCD CONTROL PANEL		
J9801	FH2-6842-020		1	CABLE, FCC		

FIGURE & KEY NO.	PARTS NUMBER	RANK	Q'TY	DESCRIPTION	SERIAL NUMBER/ REMARKS	SVC
J9802	PCB			CONTROL PANEL CPU		
J9802	FH2-6842-020		1	CABLE, FCC		
J16030	NPN			VERTICAL PATH CLUTCH	CL1	
J16030	VS1-6314-003		1	CONNECTOR, 3P, MALE		
J16070	NPN			UPPER CASSETTE RETRY SENSOR	PS7	
J16070	VS1-6314-003		1	CONNECTOR, 3P, MALE		
J16080	NPN			LOWER CASSETTE RETRY SENSOR	PS8	
J16080	VS1-6321-003		1	CONNECTOR, 3P, FEMALE		

FIGURE B2
LIST OF MOTORS

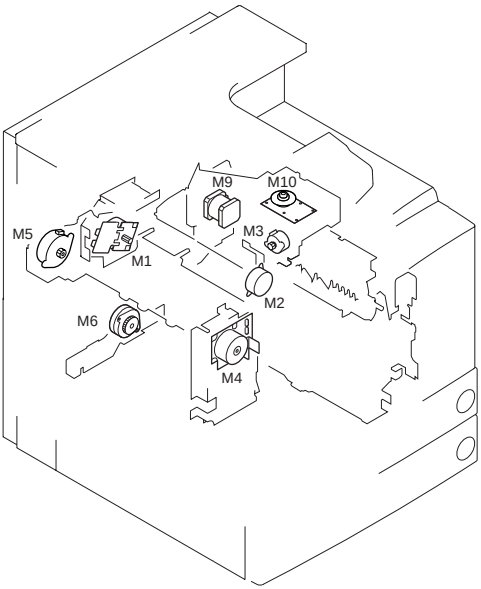

FIGURE & KEY NO.	PARTS NUMBER	RANK	Q'TY	DESCRIPTION	SERIAL NUMBER/ REMARKS	SVC
Fig.B2	NPN		RF	LIST OF MOTORS		
M1	FH6-1846-000		1	MOTOR, DC BRUSHLESS		
M2	FH6-1477-000		1	MOTOR, DC24V		
M3	FK2-0144-000		1	MOTOR, STEPPING, DC24V		
M4	FH6-1848-000		1	MOTOR, DC BRUSHLESS		
M5	FH6-1850-000		1	MOTOR, STEPPING		
M6	FH6-1851-000		1	MOTOR, STEPPING		
M9	FH6-1849-000		1	MOTOR, STEPPING		
M10	FG6-5633-000		1	SCANNER ASSEMBLY		

FIGURE B3
LIST OF FAN MOTORS

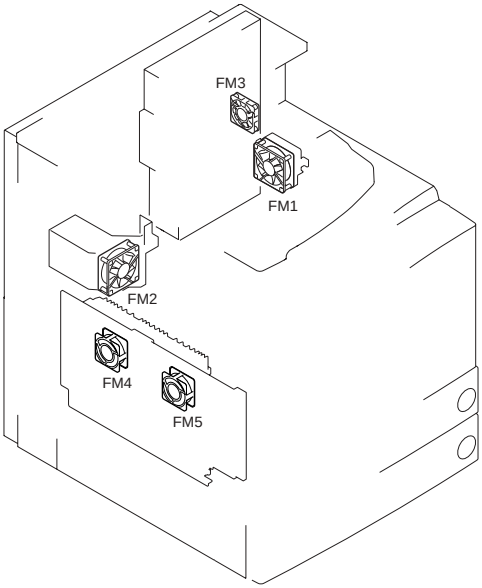

FIGURE & KEY NO.	PARTS NUMBER	RANK	Q'TY	DESCRIPTION	SERIAL NUMBER/ REMARKS	SVC
Fig.B3	NPN		RF	LIST OF FAN MOTORS		
FM1	FH6-1852-000		1	FAN		
FM2	FH6-1852-000		1	FAN		
FM4	FH6-1854-000		1	FAN		
FM5	FH6-1854-000		1	FAN		

FIGURE B4
LIST OF SENSORS

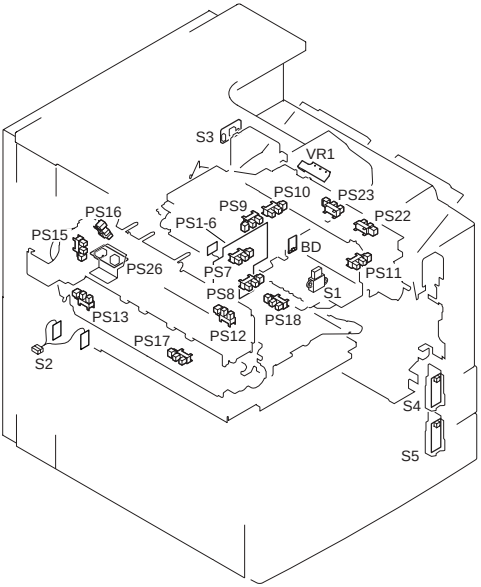

FIGURE & KEY NO.	PARTS NUMBER	RANK	Q'TY	DESCRIPTION	SERIAL NUMBER/ REMARKS	SVC
Fig.B4	NPN		RF	LIST OF SENSORS		
BD	FG6-5633-000		1	SCANNER ASSEMBLY		
PS1	FH9-0585-000		1	PHOTO-INTERRUPTER		
PS2	FH9-0585-000		1	PHOTO-INTERRUPTER		
PS3	FH9-0585-000		1	PHOTO-INTERRUPTER		
PS4	FH9-0585-000		1	PHOTO-INTERRUPTER		
PS5	FH9-0585-000		1	PHOTO-INTERRUPTER		
PS6	FH9-0585-000		1	PHOTO-INTERRUPTER		
PS7	FK2-0149-000		1	PHOTO-INTERRUPTER		
PS8	FK2-0149-000		1	PHOTO-INTERRUPTER		
PS9	FK2-0149-000		1	PHOTO-INTERRUPTER		
PS10	FK2-0149-000		1	PHOTO-INTERRUPTER		
PS11	FK2-0149-000		1	PHOTO-INTERRUPTER		
PS12	FH7-7557-020		1	PHOTO-INTERRUPTER		
PS13	FK2-0149-000		1	PHOTO-INTERRUPTER		
PS15	FH7-7557-020		1	PHOTO-INTERRUPTER		

FIGURE & KEY NO.	PARTS NUMBER	RANK	Q'TY	DESCRIPTION	SERIAL NUMBER/ REMARKS	SVC
PS16	FH7-7557-020		1	PHOTO-INTERRUPTER		
PS17	FK2-0149-000		1	PHOTO-INTERRUPTER		
PS18	FK2-0149-000		1	PHOTO-INTERRUPTER		
PS22	FK2-0149-000		1	PHOTO-INTERRUPTER		
PS23	FK2-0149-000		1	PHOTO-INTERRUPTER		
PS26	FG6-5710-000		1	FIXING FILM SENSOR PCB ASS'Y		
S1	FH7-7422-000		1	SENSOR, TONER		
S2	FM5-5153-000		1	WASTE TONER SENSOR PCB ASS'Y		
S3	FH7-7559-000		1	HUMIDITY SENSOR UNIT		
S4	FG3-1617-000		1	UPPER CASSETTE SIZE PCB ASS'Y		
S5	FG3-1618-000		1	LOWER CASSETTE SIZE PCB ASS'Y		
VR1	FG5-6289-000		1	MULTI PAPER SIZE PCB ASSEMBLY		

FIGURE B5
LIST OF CLUTCHES, AND OTHERS

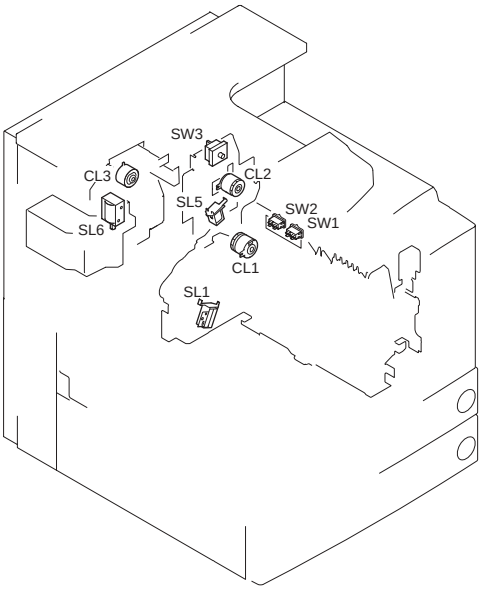

FIGURE & KEY NO.	PARTS NUMBER	RANK	Q'TY	DESCRIPTION	SERIAL NUMBER/ REMARKS	SVC
Fig.B5	NPN		RF	LIST OF CLUTCHES, AND OTHERS		
CL1	FH6-5005-020		1	CLUTCH, ELECTRO MAGNETIC		
CL2	FH6-5006-000		1	CLUTCH, ELECTRO MAGNETIC		
CL3	FH6-5007-000		1	CLUTCH, ELECTRO MAGNETIC		
SL1	FH6-5020-000		1	SOLENOID		
SL5	FH6-5051-000		1	SOLENOID		
SL6	FH6-5048-000		1	SOLENOID		
SW1	FG6-5777-000		1	POWER CORD TERMINAL ASSEMBLY	100V	
SW1	FG6-5781-000		1	POWER CORD TERMINAL ASSEMBLY	120V	
SW1	FG6-5782-000		1	POWER CORD TERMINAL ASSEMBLY	220/240V	
SW2	FG6-5777-000		1	POWER CORD TERMINAL ASSEMBLY	100V	
SW2	FG6-5781-000		1	POWER CORD TERMINAL ASSEMBLY	120V	
SW2	FG6-5782-000		1	POWER CORD TERMINAL ASSEMBLY	220/240V	
SW3	WC8-5178-000		1	SWITCH, INTERLOCK		

FIGURE B6
LIST OF HEATERS, LAMPS, ETC.

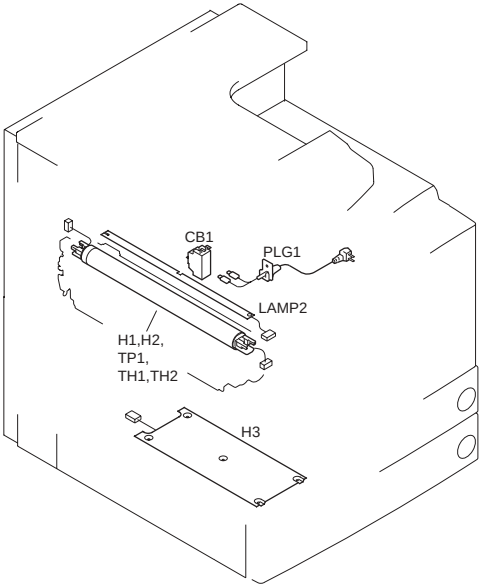

FIGURE & KEY NO.	PARTS NUMBER	RANK	Q'TY	DESCRIPTION	SERIAL NUMBER/ REMARKS	SVC
Fig.B6	NPN		RF	LIST OF HEATERS, LAMP ETC.		
CB1	FH7-7626-000		1	BREAKER, CIRCUIT	100/120V	
CB1	FH7-7625-030		1	BREAKER, CIRCUIT	220/240V	
H1	FG6-5712-120		1	FIXING FILM ASSEMBLY	100V	
H1	FG6-6039-120		1	FIXING FILM ASSEMBLY	120V	
H1	FG6-6041-120		1	FIXING FILM ASSEMBLY	220/240V	
H2	FG6-5712-120		1	FIXING FILM ASSEMBLY	100V	
H2	FG6-6039-120		1	FIXING FILM ASSEMBLY	120V	
H2	FG6-6041-120		1	FIXING FILM ASSEMBLY	220/240V	
H3	FH7-4576-000		1	HEATER, CASSETTE	ACCESSORY 100V	
LAMP2	FG5-6297-000		1	PRECONDITIONING LAMP PCB UNIT		
PLG1	FF3-4192-000		1	CORD, POWER	100V	
PLG1	FF3-4193-000		1	CORD, POWER	120V	
PLG1	FH2-7080-000		1	POWER CORD	220V	
PLG1	FH2-7081-000		1	POWER CORD	240V UK	
PLG1	FH2-7082-000		1	POWER CORD	240V CA	

FIGURE & KEY NO.	PARTS NUMBER	RANK	Q'TY	DESCRIPTION	SERIAL NUMBER/ REMARKS	SVC
TH1	FG6-5712-120		1	FIXING FILM ASSEMBLY	100V	
TH1	FG6-6039-120		1	FIXING FILM ASSEMBLY	120V	
TH1	FG6-6041-120		1	FIXING FILM ASSEMBLY	220/240V	
TH2	FG6-5712-120		1	FIXING FILM ASSEMBLY	100V	
TH2	FG6-6039-120		1	FIXING FILM ASSEMBLY	120V	
TH2	FG6-6041-120		1	FIXING FILM ASSEMBLY	220/240V	
TP1	FG6-5712-120		1	FIXING FILM ASSEMBLY	100V	
TP1	FG6-6039-120		1	FIXING FILM ASSEMBLY	120V	
TP1	FG6-6041-120		1	FIXING FILM ASSEMBLY	220/240V	

FIGURE B7
LIST OF PCBS

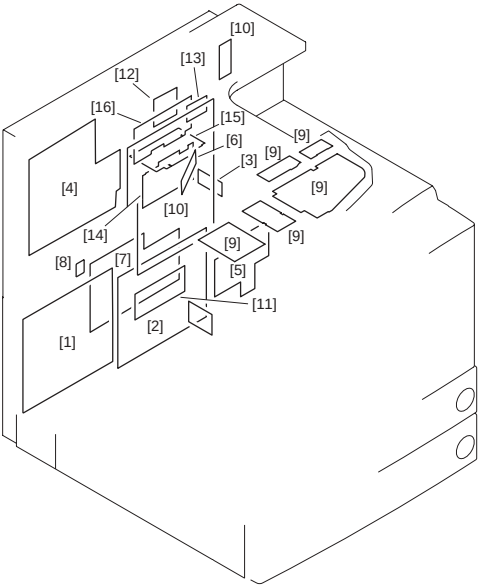

FIGURE & KEY NO.	PARTS NUMBER	RANK	Q'TY	DESCRIPTION	SERIAL NUMBER/ REMARKS	SVC
Fig.B7	NPN		RF	LIST OF PCBS		
1	FG3-1603-000		1	HV POWER SUPPLY PCB ASSEMBLY	100/120V	
1	FG3-1604-000		1	HV POWER SUPPLY PCB ASSEMBLY	220/240V	
2	FH3-2613-020		1	SWITCHING REGULATOR PCB ASS'Y	100/120V	
2	FH3-2614-020		1	SWITCHING REGULATOR PCB ASS'Y	220/240V	
3	FG6-5777-000		1	POWER CORD TERMINAL ASSEMBLY	100V	
3	FG6-5781-000		1	POWER CORD TERMINAL ASSEMBLY	120V	
3	FG6-5782-000		1	POWER CORD TERMINAL ASSEMBLY	220/240V	
4	FG3-1998-020		1	DC CONTROLLER PCB ASSEMBLY	100V	
4	FG3-1999-020		1	DC CONTROLLER PCB ASSEMBLY	220/240V	
5	FG6-0455-000		1	PAPER PICK-UP PCB ASSEMBLY		
6	FG6-5633-000		1	SCANNER ASSEMBLY		
7	FH3-2615-000		1	SWITCHING REGULATOR PCB ASS'Y	ACC TYPE 100/120V	
7	FH3-2616-020		1	SWITCHING REGULATOR PCB ASS'Y	ACC TYPE 220/240V	
8	FG3-0133-000		1	DRUM SENSOR UNIT		
9	FG3-1795-000		1	CONTROL PANEL CPU PCB ASSEMBLY		

FIGURE & KEY NO.	PARTS NUMBER	RANK	Q'TY	DESCRIPTION	SERIAL NUMBER/ REMARKS	SVC
9	FG6-7021-000		1	CONTROL PANEL PCB ASSEMBLY		
9	FG6-7738-000		1	C. PANEL INVERTER PCB ASSEMBLY		
10	FG3-2232-080		1	MAIN CONTROLLER PCB ASSEMBLY		
10	FG3-1744-020		1	CENTRO PCB ASSEMBLY		
11	FG3-1608-000		1	THERMISTOR PCB ASSEMBLY	220/240V	
12	FG6-5831-000		1	DIFFERENTIAL PCB ASSEMBLY		
13	FM1-0196-000		1	ETHERNET BOARD PCB ASSEMBLY		
14	FG6-6069-000		1	RESOLUTION CONV. PCB ASSEMBLY		
15	FG6-5795-000		1	RISER BOARD PCB ASSEMBLY		
16	FG3-2959-000		1	LIPS BOARD PCB ASSEMBLY	100V	

Cassette Feeding Unit-W1(Parts Catalog)

Cassette Feeding Unit-W1

F25-5401 **XDM00001-**

Contents

ZA ASSEMBLY LOCATION DIAGRAM 4-1
Z10 EXTERNAL COVERS, PANELS, ETC. 4-2
Z11 INTERNAL COMPONENTS 4-3
Z12 RIGHT DOOR ASSEMBLY 4-7
Z20 MAIN DRIVE ASSEMBLY 4-8
Z32 CASSETTE HEATER ASSEMBLY (ACCESSORY) 4-9
Z35 VERTICAL PATH ASSEMBLY 4-10
Z40 PAPER PICK-UP ASSEMBLY 4-11
Z90 DC CONTROLLER PCB ASSEMBLY 4-16
Z91 PEDESTAL PICK-UP PCB ASSEMBLY 4-17
ZB1 LIST OF CONNECTORS 4-18
ZB2 LIST OF ELECTRIC PARTS 4-21

FIGURE ZA
ASSEMBLY LOCATION DIAGRAM

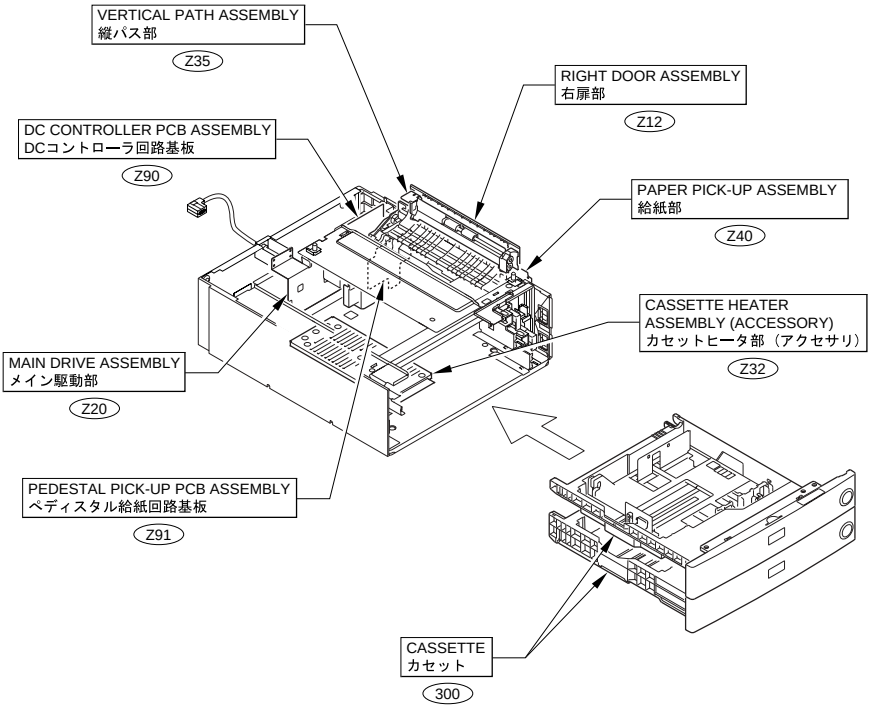

FIGURE Z10
EXTERNAL COVERS, PANELS, ETC.

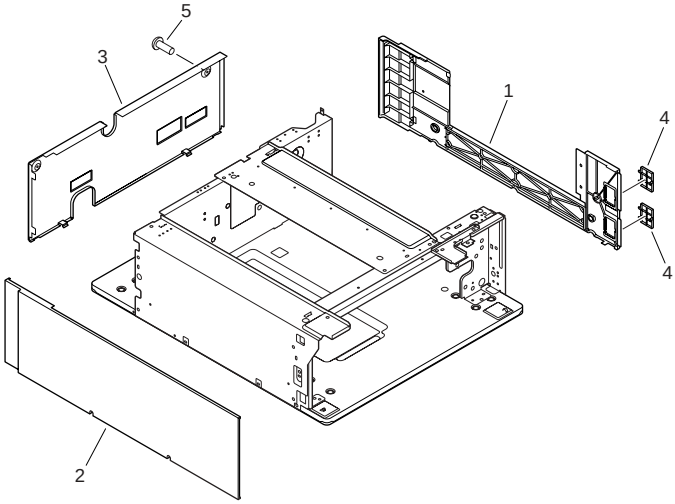

FIGURE & KEY NO.	PARTS NUMBER	RANK	Q'TY	DESCRIPTION	SERIAL NUMBER/ REMARKS	SVC
Fig.Z10	NPN		RF	EXTERNAL COVERS, PANELS, ETC.		
1	FB5-5385-000		1	PANEL, RIGHT		
2	FB5-5386-000		1	PANEL, LEFT		
3	FB5-5387-000		1	PANEL, REAR		
4	FB5-5399-000		2	COVER, RIGHT, SMALL		
5	XA9-0633-000		2	SCREW,W/WASHER,M4X8		

FIGURE Z11
INTERNAL COMPONENTS

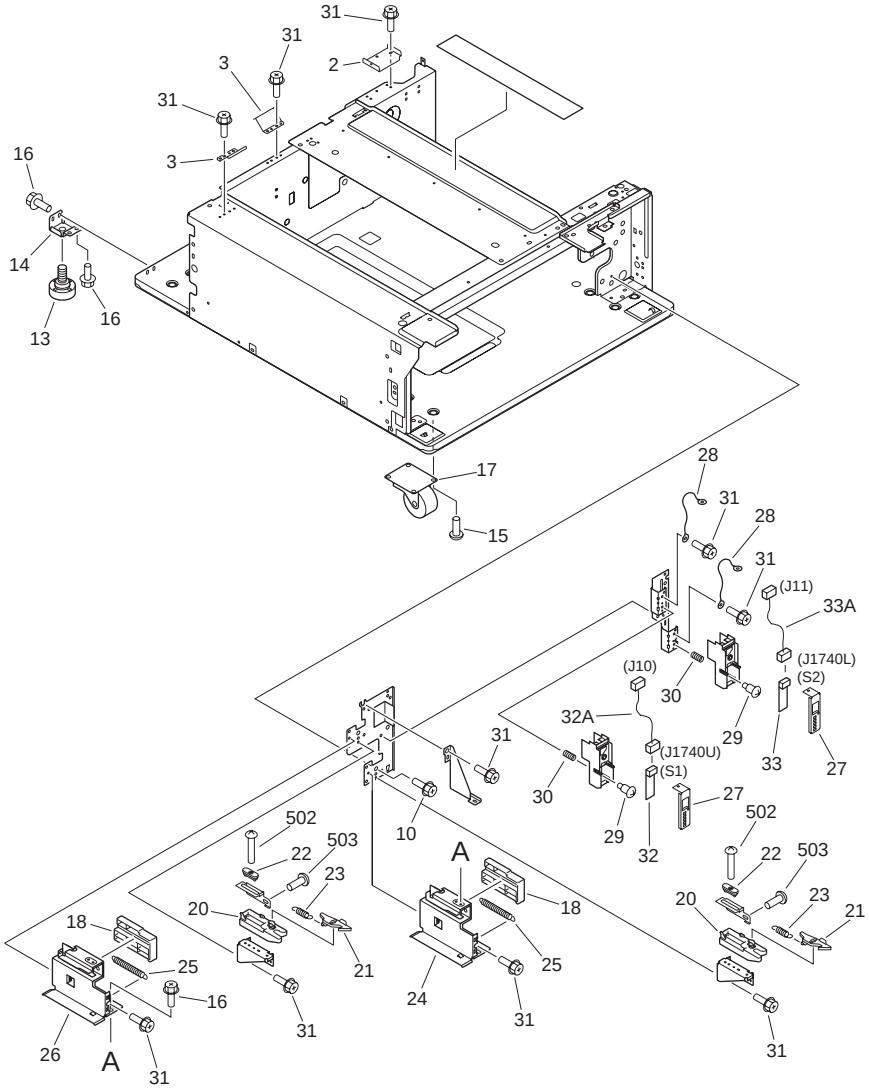

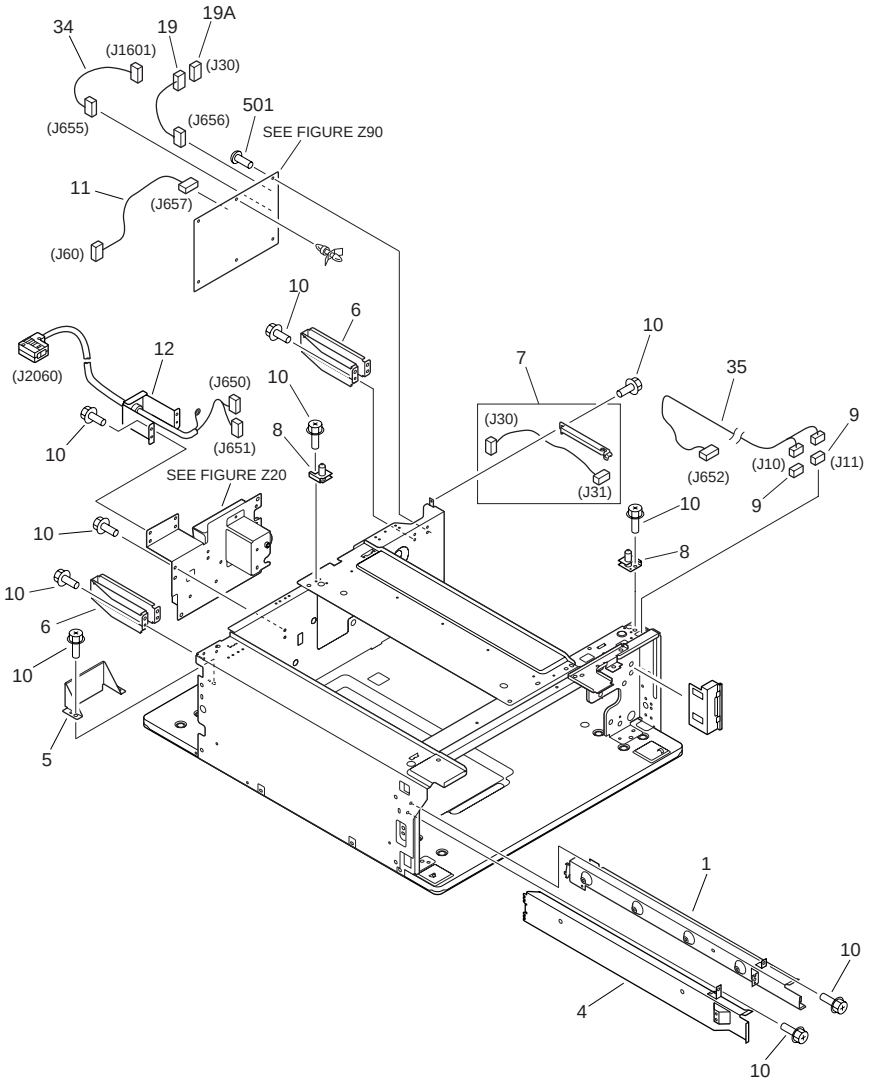

FIGURE & KEY NO.	PARTS NUMBER	RANK	Q'TY	DESCRIPTION	SERIAL NUMBER/ REMARKS	SVC
Fig.Z11	NPN		RF	INTERNAL COMPONENTS		
1	FB3-2210-000		1	RAIL, LEFT, UPPER		

FIGURE & KEY NO.	PARTS NUMBER	RANK	Q'TY	DESCRIPTION	SERIAL NUMBER/ REMARKS	SVC
2	FB3-4144-000		1	COVER, FOOT, RIGHT, REAR		
3	FB3-7216-000		2	PLATE, GROUNDING		
4	FB5-5162-000		1	RAIL, LEFT, LOWER		
5	FB5-5397-000		1	COVER, REAR PANEL		
6	FB5-5398-000		2	SUPPORT, REAR PANEL		
7	FF3-1318-000		1	CABLE, RIGHT DOOR	J30,31	
8	FF5-4901-000		2	PIN, POSITIONING		
9	VS1-7440-006		2	CONNECTOR, SNAP TIGHT	J10,11	
10	XA9-0732-000		AR	SCREW,RS,M4X8		
11	FG3-1733-000		1	CABLE, MOTOR	J60,657	
12	FG3-1730-000		1	INTERFACE CABLE	J650,651,2060	
13	FB2-8506-020		4	ADJUSTER		
14	FB5-5400-000		4	MOUNT, ADJUSTING		
15	FE9-0290-000		16	SCREW, W/WASHER		
16	XA9-0629-000		9	SCREW,RS,M4X8		
17	XZ9-0618-000		4	CASTER		
18	FB5-3928-000		2	COVER, RIGHT RAIL		
19	FG3-1734-000		1	CABLE, R. DOOR SENSOR CONNECT	J30,656	
19A	VS1-7177-003		1	CONNECTOR, SNAP TIGHT	J30	
20	FB3-2937-000		2	BLOCK, CASSETTE STOP		
21	FB5-1471-000		2	LEVER, CLICK		
22	FB5-4762-000		2	GUIDE, CASSETTE CLICK		
23	FS7-2287-000		2	SPRING, TENSION		
24	FF6-0087-000		1	RAIL, RIGHT, LOWER		
25	FS7-2288-000		2	SPRING, TENSION		
26	FF6-0096-000		1	RAIL, RIGHT, UPPER		
27	FB3-2948-000		2	COVER, PCB		
28	FF3-1171-000		2	CABLE, GROUNDING		
29	FS5-9397-000		2	SCREW,STEPPED,M4		
30	FS6-2311-000		2	SPRING, COMPRESSION		
31	XA9-0626-000		AR	SCREW,RS,M3X6		
32	FG3-1761-000		1	SIZE SENSOR PCB ASSEMBLY	S1 J1740U	

FIGURE & KEY NO.	PARTS NUMBER	RANK	Q'TY	DESCRIPTION	SERIAL NUMBER/ REMARKS	SVC
32A	FF3-4287-000		1	CABLE, SIZE SENSOR	J10,1740U	
33	FG3-1896-000		1	CASSETTE SIZE SENSOR PCB ASS'Y	S2 J1740L	
33A	FF3-4341-000		1	CABLE, SIZE SENSOR PCB	J11,1740L	
34	FG3-1731-000		1	CABLE, PAPER PICK-UP	J655,1601	
35	FG3-1732-000		1	CABLE, CASSETTE SIZE CONNECT	J10,11,652	
501	XB1-2300-607		5	SCREW,MACH.,TRUSS HEAD,M3X6		
502	XB1-2301-009		2	SCREW,MACH.,TRUSS HEAD,M3X10		
503	XB6-7400-609		2	SCREW,TP,M4X6		

FIGURE Z12
RIGHT DOOR ASSEMBLY

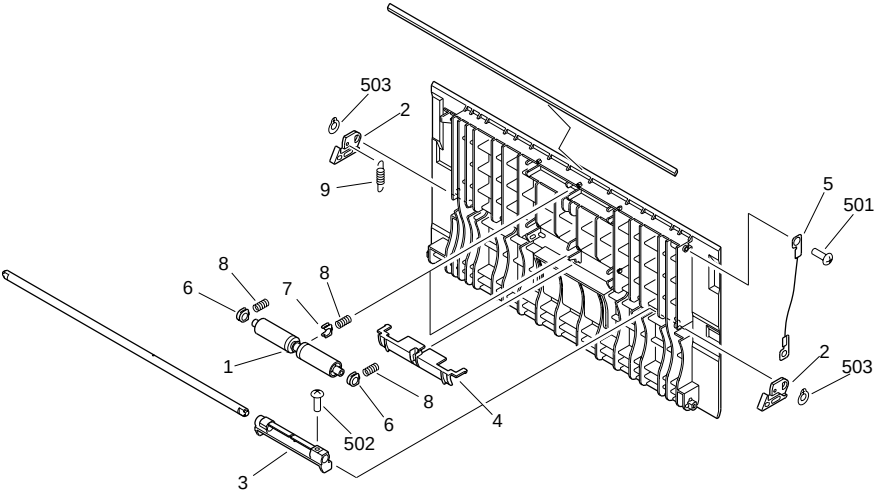

FIGURE & KEY NO.	PARTS NUMBER	RANK	Q'TY	DESCRIPTION	SERIAL NUMBER/ REMARKS	SVC
Fig.Z12	FG6-5987-000		1	RIGHT DOOR ASSEMBLY		
1	FB3-2811-000		2	ROLLER, BELT IDLER		
2	FB3-2837-000		2	HOOK, RIGHT DOOR		
3	FB3-4151-000		1	KNOB		
4	FB3-4154-000		1	COVER, KNOB		
5	FB5-2340-000		1	WIRE, DOOR STOP		
6	FS5-1595-000		4	BLOCK, ROLLER		
7	FS5-1598-000		2	BLOCK, ROLLER		
8	FS6-2308-000		6	SPRING, COMPRESSION		
9	FS7-2363-000		1	SPRING, TENSION		
501	XB4-7400-809		1	SCREW,TAPPING,TRUSS HEAD,M4X8		
502	XB6-7400-809		1	SCREW,TP,M4X8		
503	XD2-2100-502		2	RING,GRIP		

FIGURE Z20
MAIN DRIVE ASSEMBLY

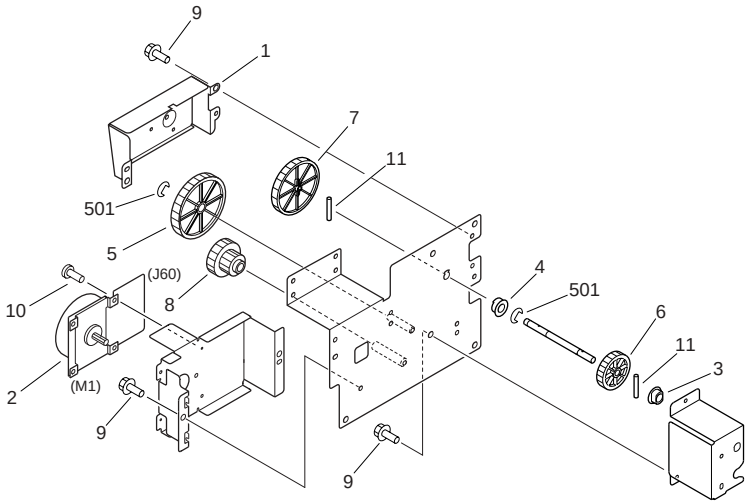

FIGURE & KEY NO.	PARTS NUMBER	RANK	Q'TY	DESCRIPTION	SERIAL NUMBER/ REMARKS	SVC
Fig.Z20	FG6-5988-000		1	MAIN DRIVE ASSEMBLY		
1	FB5-5396-000		1	COVER, GEAR		
2	FH6-1523-000		1	MOTOR, DC24V	M1 J60	
3	FS1-1401-000		1	BUSHING		
4	FS5-1685-000		1	BUSHING		
5	FS6-0633-000		1	GEAR, 60T		
6	FS6-0635-000		1	GEAR, 44T		
7	FS7-0791-000		1	GEAR, 52T		
8	FS7-0792-000		1	GEAR, 19T/65T		
9	XA9-0629-000		6	SCREW,RS,M4X8		
10	XA9-0624-000		4	SCREW,M3X4		
11	XD9-0121-000		2	PIN,DOWEL		
501	XD2-1200-502		3	RING,E		

FIGURE Z32
CASSETTE HEATER ASSEMBLY (ACCESSORY)

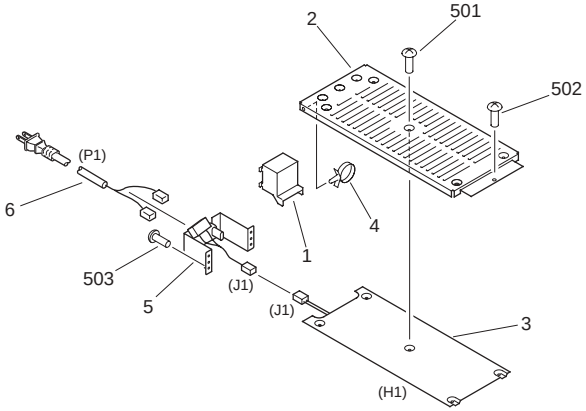

FIGURE & KEY NO.	PARTS NUMBER	RANK	Q'TY	DESCRIPTION	SERIAL NUMBER/ REMARKS	SVC
Fig.Z32	NPN		RF	CASSETTE HEATER ASSEMBLY	ACCESSORY 100V	
1	FB3-3192-020		1	COVER, HEATER CONNECTOR		
2	FB3-7192-020		1	COVER, CASSETTE HEATER		
3	FH7-4576-000		1	HEATER, CASSETTE	H1 J1	
4	WT2-5041-000		1	TIE, CABLE		
5	FG6-5995-030		1	POWER SUPPLY CABLE MOUNT UNIT	J1	
6	FH2-6706-000		1	CORD, POWER	P1	
501	XB1-2400-409		5	SCREW,MACH.,TRUSS HEAD,M4X4		
502	XB1-2400-606		1	SCREW,MACH.,TRUSS HEAD,M4X6		
503	XB1-2300-609		2	SCREW,MACH.,TRUSS HEAD,M3X6		

FIGURE Z35
VERTICAL PATH ASSEMBLY

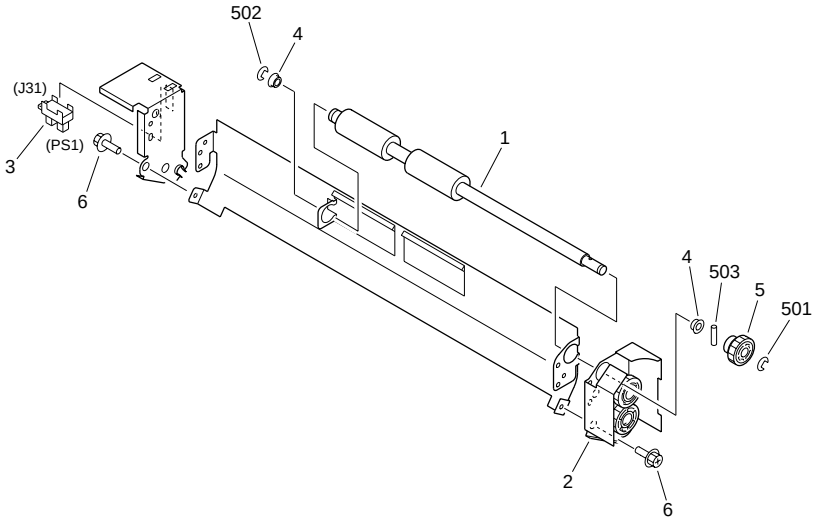

FIGURE & KEY NO.	PARTS NUMBER	RANK	Q'TY	DESCRIPTION	SERIAL NUMBER/ REMARKS	SVC
Fig.Z35	FG6-5993-000		1	VERTICAL PATH ASSEMBLY		
1	FB5-5403-000		1	ROLLER, VERTICAL PATH		
2	FF5-4908-000		1	BOX, GEAR		
3	WG8-5708-000		1	PHOTO-INTERRUPTER	PS1 J31	
4	FS5-1594-020		2	BUSHING		
5	FS6-0629-000		1	GEAR, 16T		
6	XA9-0626-000		4	SCREW,RS,M3X6		
501	XD2-1100-502		1	RING,E		
502	XD2-1100-642		1	RING,E		
503	XD3-2200-082		1	PIN,DOWEL		

FIGURE Z40
PAPER PICK-UP ASSEMBLY

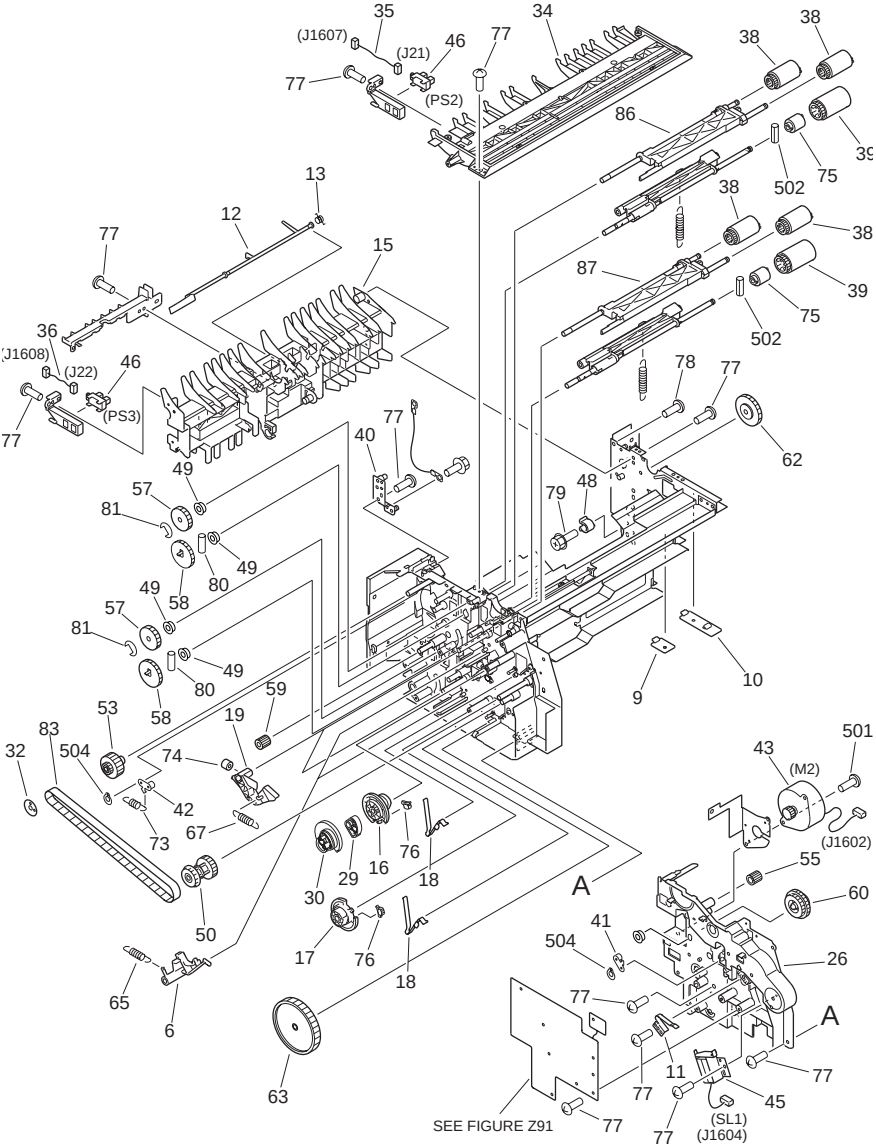

NOTE : This assembly includes the assembly shown in Figure Z91 .

注：このユニットはFigure Z91のユニットを含みます。

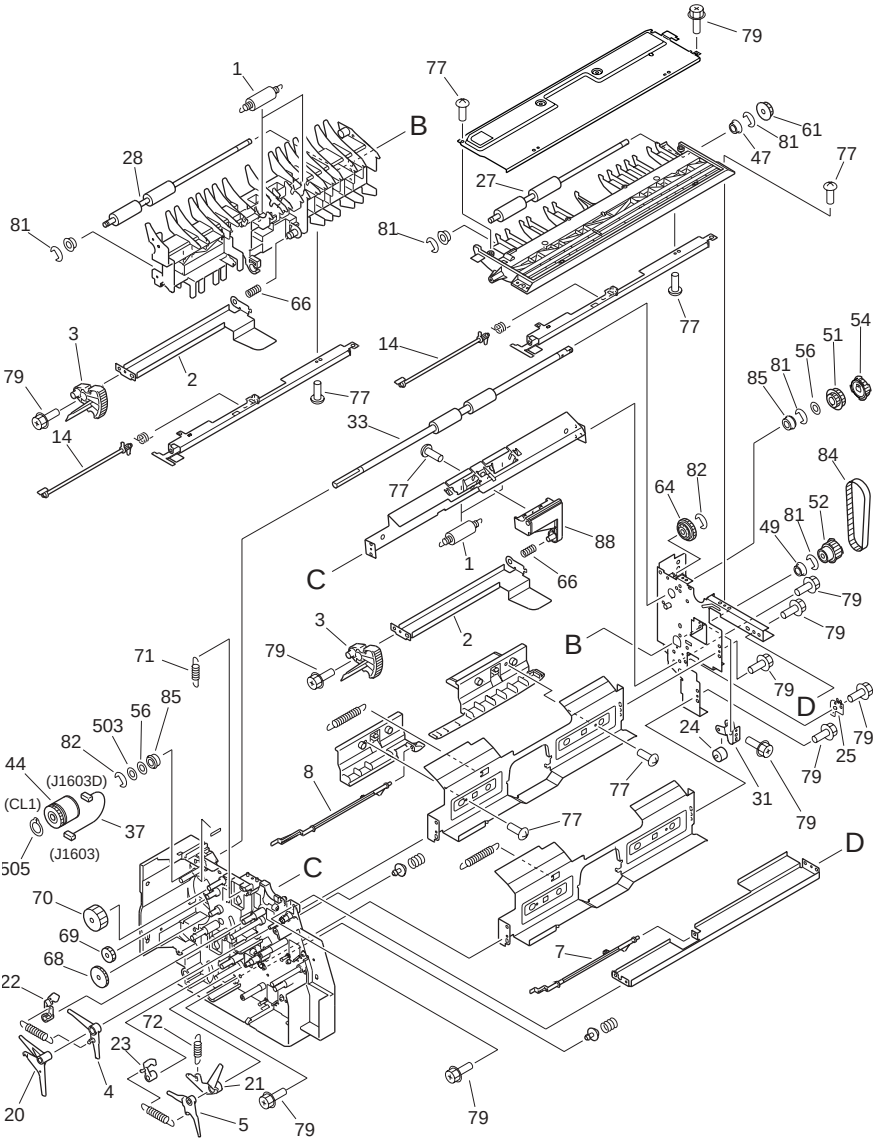

FIGURE & KEY NO.	PARTS NUMBER	RANK	Q'TY	DESCRIPTION	SERIAL NUMBER/ REMARKS	SVC
Fig.Z40	FG6-5989-000		1	PAPER PICK-UP ASSEMBLY	SEE NOTE	

FIGURE & KEY NO.	PARTS NUMBER	RANK	Q'TY	DESCRIPTION	SERIAL NUMBER/ REMARKS	SVC
1	FB5-5415-000		4	ROLLER, PAPER FEED		
2	FB3-2855-020		2	PLATE, LIFTER		
3	FB3-2856-020		2	GEAR, RATCHET		
4	FB3-2863-000		1	LEVER, LIFTER, UPPER		
5	FB3-2864-000		1	LEVER, LIFTER, LOWER		
6	FB3-2868-020		2	CLAW, LIFTER LOCK		
7	FB3-2880-000		1	FLAG, PAPER SENSOR, UPPER		
8	FB3-2881-000		1	FLAG, PAPER SENSOR, LOWER		
9	FB3-2894-020		1	GUIDE, LOWER CASSETTE		
10	FB3-2897-020		1	GUIDE, UPPER CASSETTE		
11	FB3-2898-020		1	SPRING, LEAF		
12	FB3-4149-000		1	FLAG, VERTICAL SENSOR		
13	FB3-4155-000		1	SPRING, TORSION		
14	FB4-3343-000		2	FLAG, RETRY SENSOR		
15	FB4-3801-000		1	GUIDE, MIDDLE		
16	FB4-5347-000		1	CAM, LIFT UP, UPPER		
17	FB5-9802-000		1	CAM, LIFT UP, LOWER		
18	FB4-5349-000		2	SPRING, LEAF		
19	FB4-5350-000		2	CLAW, LIFTER ARM		
20	FB5-9794-000		1	ARM, LIFTER, UPPER		
21	FB4-5365-000		1	ARM, LIFTER, LOWER		
22	FB5-9795-000		1	LEVER, LOCK, UPPER		
23	FB4-5367-000		1	LEVER, PICK LOCK, LOWER		
24	FB5-4726-000		1	ROLLER, BELT ADJUSTING		
25	FB5-4727-000		1	SPRING, LEAF, GROUNDING		
26	FB5-4728-000		1	COVER, PAPER PICK-UP FRAME		
27	FB5-5412-000		1	ROLLER, PAPER FEED, UPPER		
28	FB5-5413-000		1	ROLLER, PAPER FEED, LOWER		
29	FB5-5286-000		1	CAM, PICK-UP ROLLER, UPPER		
30	FB5-5287-000		1	CAM, PICK-UP ROLLER, LOWER		
31	FB5-5289-000		1	HOLDER, ROLLER		
32	FB5-5402-000		1	FLANGE, BELT		

FIGURE & KEY NO.	PARTS NUMBER	RANK	Q'TY	DESCRIPTION	SERIAL NUMBER/ REMARKS	SVC
33	FB5-5404-000		1	ROLLER, VERTICAL PATH		
34	FB5-5405-000		1	GUIDE, UPPER		
35	FF3-2974-000		1	CABLE, UPPER RETRY SENSOR	J21,1607	
36	FF3-2975-000		1	CABLE, LOWER RETRY SENSOR	J22,1608	
37	FF3-4175-000		1	CABLE, VERTICAL PATH CLUTCH	J1603,1603D	
38	FF5-4552-020		4	ROLLER, PAPER PICK-UP		
39	FF5-4634-020		2	ROLLER, PAPER SEPARATION		
40	FF5-4903-000		1	PLATE, PIVOT		
41	FF6-0297-000		1	PLATE, TENSION, UPPER		
42	FF6-0299-000		1	PLATE, TENSION, LOWER		
43	FH6-1477-000		1	MOTOR, DC24V	M2 J1602	
44	FH6-5005-020		1	CLUTCH, ELECTRO MAGNETIC	CL1 J1603D	
45	FH6-5020-000		1	SOLENOID	SL1 J1604	
46	FK2-0149-000		2	PHOTO-INTERRUPTER	PS2,3 J21,22	
47	FS5-1164-000		1	BUSHING, UPPER ROLLER		
48	FS5-1589-000		1	BUSHING		
49	FS5-1948-000		5	BUSHING		
50	FS5-3620-000		1	PULLEY, 32T/40T		
51	FS5-3821-000		1	PULLEY, 40T/GEAR, 16T		
52	FS5-3823-000		1	PULLEY, 40T		
53	FS5-3830-000		1	PULLEY, 25T/GEAR, 28T		
54	FS5-3831-000		1	PULLEY, 40T		
55	FS5-3833-000		1	PULLEY, 24T		
56	FS5-6487-000		2	WASHER		
57	FS6-0564-000		2	GEAR, 35T		
58	FS6-0565-000		2	GEAR, 42T		
59	FS6-0569-000		1	GEAR, 14T		
60	FS6-0570-000		1	GEAR, 35T/44T		
61	FS6-0572-000		1	GEAR, 16T		
62	FS6-0574-000		1	GEAR, 38T		
63	FS6-0576-000		1	GEAR, 86T		
64	FS6-0631-000		1	GEAR, 24T		

FIGURE & KEY NO.	PARTS NUMBER	RANK	Q'TY	DESCRIPTION	SERIAL NUMBER/ REMARKS	SVC
65	FS6-2328-020		2	SPRING, TENSION		
66	FS6-2330-000		2	SPRING, COMPRESSION		
67	FS6-2900-000		2	SPRING, TENSION		
68	FS7-0103-000		1	GEAR, 35T		
69	FS7-0104-000		1	GEAR, 24T		
70	FS7-0105-000		1	GEAR, 35T		
71	FS7-2413-000		1	SPRING, TENSION		
72	FS7-2414-000		1	SPRING, TENSION		
73	FS7-2775-000		1	SPRING, TENSION		
74	RB1-6539-000		2	DAMPER		
75	FB6-5091-000		2	LIMITER, TORQUE		
76	RB1-6592-000		2	GEAR, 3T		
77	XA9-0591-000		AR	SCREW,M3X8		
78	XA9-0679-000		1	SCREW,MACH.,FLAT HEAD,M3X4		
79	XA9-0724-000		15	SCREW,RS,M3X8		
80	XD9-0104-000		3	DOWEL PIN		
81	XD9-0131-000		10	RING,E		
82	XD9-0131-000		2	RING,E		
83	XF2-1121-540		1	BELT, TIMING		
84	XF2-3110-840		1	BELT, TIMING		
85	XG3-8012-355		2	BALL BEARING, NSK MF128ZZ1MC3		
86	FF6-0108-000		1	HOLDER, ROLLER, UPPER		
87	FF6-0109-000		1	HOLDER, ROLLER, LOWER		
88	FB3-2889-000	N	1	MOUNT, LIFTER, LOWER		
501	XB1-2300-409		1	SCREW,MACH.,TRUSS HEAD,M3X4		
502	XD3-1200-122		4	PIN,SPRING		
503	XD1-1108-225		1	SHIM		
504	XD2-2100-402		2	RING,GRIP		
505	XD2-2100-802		1	RING,GRIP		
	FC6-9867-000		1	RING, RETAINING		
	FC8-1205-000		1	PAD, HOLDER		

FIGURE Z90
DC CONTROLLER PCB ASSEMBLY

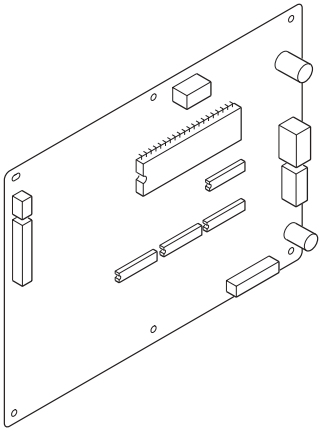

FIGURE & KEY NO.	PARTS NUMBER	RANK	Q'TY	DESCRIPTION	SERIAL NUMBER/ REMARKS	SVC
Fig.Z90	FG6-0770-000		1	DC CONTROLLER PCB ASSEMBLY		
	FG6-7820-000		1	DECK CONTROLLER PCB ASS'Y		

FIGURE Z91
PEDESTAL PICK-UP PCB ASSEMBLY

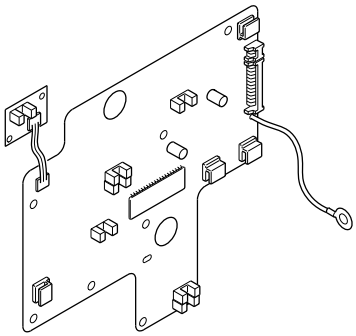

NOTE : This assembly is included in the assembly shown in Figure Z40.

注：このユニットはFigure Z40のユニットに含まれます。

FIGURE & KEY NO.	PARTS NUMBER	RANK	Q'TY	DESCRIPTION	SERIAL NUMBER/ REMARKS	SVC
Fig.Z91	FG6-0767-000		1	PAPER PICK-UP PCB ASSEMBLY	SEE NOTE	

FIGURE ZB1
LIST OF CONNECTORS

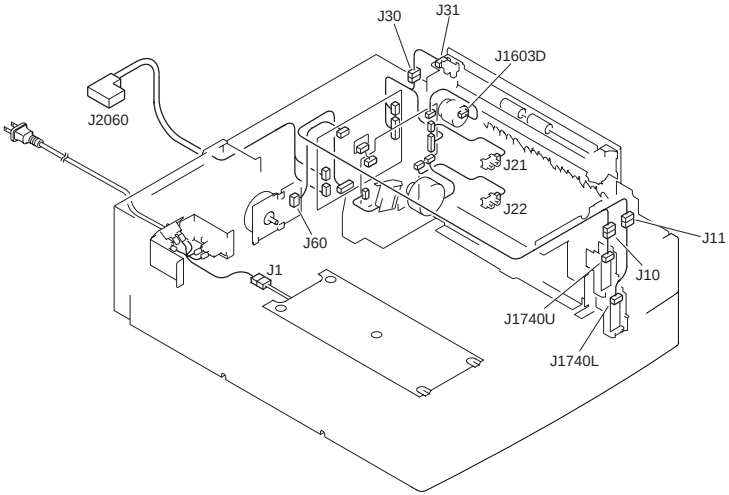

FIGURE & KEY NO.	PARTS NUMBER	RANK	Q'TY	DESCRIPTION	SERIAL NUMBER/ REMARKS	SVC
Fig.ZB1	NPN		RF	LIST OF CONNECTORS		
J1	NPN			CASSETTE HEATER	ACCESSORY 100V H1	
J1	VS4-0002-002		1	CONNECTOR, 2P, FEMALE	ACCESSORY 100V	
J1	WS4-0217-000		2	SOCKET CONTACT, 22-18AWG	ACCESSORY 100V	
J10	VS1-7178-006		1	CONNECTOR, 6P, FEMALE		
J10	VS1-6321-006		1	CONNECTOR, 6P, FEMALE		
J10	VS1-7440-006		1	CONNECTOR, SNAP TIGHT		
J11	VS1-7178-006		1	CONNECTOR, 6P, FEMALE		
J11	VS1-6320-006		1	CONNECTOR, 6P, FEMALE		
J11	VS1-7440-006		1	CONNECTOR, SNAP TIGHT		
J21	NPN			CASSETTE 3 RETRY SENSOR	PS2	
J21	VS1-6321-003		1	CONNECTOR, 3P, FEMALE		
J22	NPN			CASSETTE 4 RETRY SENSOR	PS3	
J22	VS1-6321-003		1	CONNECTOR, 3P, FEMALE		
J30	VS1-7178-003		1	CONNECTOR, 3P, FEMALE		
J30	VS1-6321-003		1	CONNECTOR, 3P, FEMALE		
J30	VS1-7177-003		1	CONNECTOR, SNAP TIGHT		
J31	NPN			RIGHT DOOR SENSOR	PS1	

FIGURE & KEY NO.	PARTS NUMBER	RANK	Q'TY	DESCRIPTION	SERIAL NUMBER/ REMARKS	SVC
J31	VS1-7178-003		1	CONNECTOR, 3P, FEMALE		
J60	NPN			PEDESTAL MAIN MOTOR	M1	
J60	VS3-0312-004		1	CONNECTOR, 4P, MALE		
J60	WS3-5005-000		4	SOCKET CONTACT, 24-28AWG		
J650	PCB			PEDESTAL CONTROLLER		
J650	VS3-5083-004		1	CONNECTOR, 4P, FEMALE		
J650	WS3-5160-000		3	SOCKET CONTACT, 18-24AWG		
J651	PCB			PEDESTAL CONTROLLER		
J651	VS1-7178-007		1	CONNECTOR, 7P, FEMALE		
J652	PCB			PEDESTAL CONTROLLER		
J652	VS1-6314-014		1	CONNECTOR, 14P, MALE		
J655	PCB			PEDESTAL CONTROLLER		
J655	VS1-6314-018		1	CONNECTOR, 18P, MALE		
J656	PCB			PEDESTAL CONTROLLER		
J656	VS1-6314-003		1	CONNECTOR, 3P, MALE		
J657	PCB			PEDESTAL CONTROLLER		
J657	VS3-0312-004		1	CONNECTOR, 4P, MALE		
J657	WS3-5005-000		4	SOCKET CONTACT, 24-28AWG		
J1601	PCB			PEDESTAL PICK-UP		
J1601	VS1-6314-018		1	CONNECTOR, 18P, MALE		
J1602	PCB			PEDESTAL PICK-UP		
J1602	NPN			CASSETTE PICK-UP MOTOR	M2	
J1603	PCB			PEDESTAL PICK-UP		
J1603	VS1-6321-004		1	CONNECTOR, 4P, FEMALE		
J1603D	NPN			VERTICAL PATH ROLLER CLUTCH	CL1	
J1603D	VS1-6314-003		1	CONNECTOR, 3P, MALE		
J1604	PCB			PEDESTAL PICK-UP		
J1604	NPN			PICK-UP ROLLER DOWN SOLENOID	SL1	
J1607	PCB			PEDESTAL PICK-UP		
J1607	VS1-6314-003		1	CONNECTOR, 3P, MALE		
J1608	PCB			PEDESTAL PICK-UP		
J1608	VS1-6321-003		1	CONNECTOR, 3P, FEMALE		

FIGURE & KEY NO.	PARTS NUMBER	RANK	Q'TY	DESCRIPTION	SERIAL NUMBER/ REMARKS	SVC
J1740L	NPN			CASSETTE 4 SIZE SENSOR	S2	
J1740L	VS1-6023-006		1	CONNECTOR, 6P, FEMALE		
J1740U	NPN			CASSETTE 3 SIZE SENSOR	S1	
J1740U	VS1-6023-006		1	CONNECTOR, 6P, FEMALE		
J2060	SYS			COPIER		
J2060	FK2-0212-000		1	HOUSING		
J2060	VS1-5452-008		1	CONNECTOR, 8P, FEMALE		
J2060	WS3-5018-000		4	SOCKET, CONTACT, AWG18-24		

FIGURE ZB2
LIST OF ELECTRIC PARTS

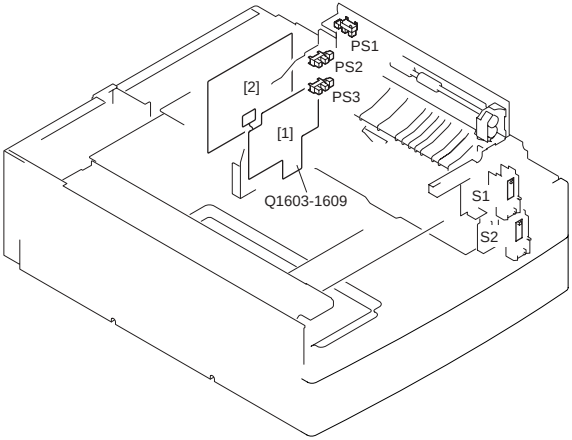

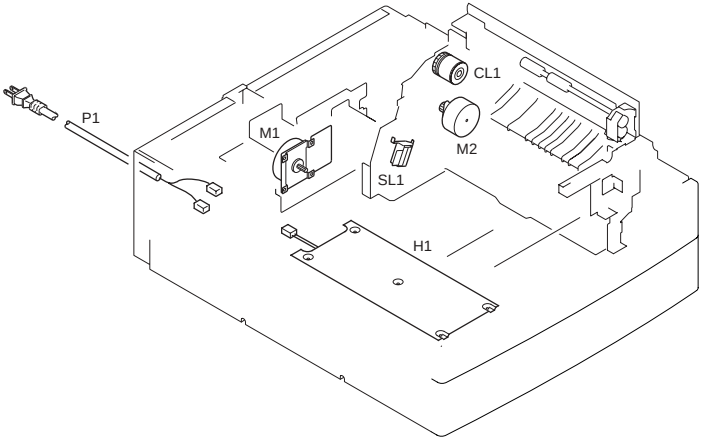

FIGURE & KEY NO.	PARTS NUMBER	RANK	Q'TY	DESCRIPTION	SERIAL NUMBER/ REMARKS	SVC
Fig.ZB2	NPN		RF	LIST OF ELECTRIC PARTS		
1	FG6-0767-000		1	PAPER PICK-UP PCB ASSEMBLY		
2	FG6-0770-000		1	DC CONTROLLER PCB ASSEMBLY		
CL1	FH6-5005-020		1	CLUTCH, ELECTRO MAGNETIC		
H1	FH7-4576-000		1	HEATER, CASSETTE	ACCESSORY 100V	
M1	FH6-1523-000		1	MOTOR, DC24V		

FIGURE & KEY NO.	PARTS NUMBER	RANK	Q'TY	DESCRIPTION	SERIAL NUMBER/ REMARKS	SVC
M2	FH6-1477-000		1	MOTOR, DC24V		
P1	FH2-6706-000		1	CORD, POWER	ACCESSORY 100V	
PS1	WG8-5708-000		1	PHOTO-INTERRUPTER		
PS2	FK2-0149-000		1	PHOTO-INTERRUPTER		
PS3	FK2-0149-000		1	PHOTO-INTERRUPTER		
Q1603	FG6-0767-000		1	PAPER PICK-UP PCB ASSEMBLY		
Q1604	FG6-0767-000		1	PAPER PICK-UP PCB ASSEMBLY		
Q1605	FG6-0767-000		1	PAPER PICK-UP PCB ASSEMBLY		
Q1606	FG6-0767-000		1	PAPER PICK-UP PCB ASSEMBLY		
Q1607	FG6-0767-000		1	PAPER PICK-UP PCB ASSEMBLY		
Q1608	FG6-0767-000		1	PAPER PICK-UP PCB ASSEMBLY		
Q1609	FG6-0767-000		1	PAPER PICK-UP PCB ASSEMBLY		
S1	FG3-1761-000		1	SIZE SENSOR PCB ASSEMBLY		
S2	FG3-1896-000		1	CASSETTE SIZE SENSOR PCB ASS'Y		
SL1	FH6-5020-000		1	SOLENOID		

Paper Deck-L1(Parts Catalog)

Paper Deck-L1

A4 SIZE	**F25-5501**	**XDS00001-**
LTR SIZE	**F25-5511**	**XDT00001-**

Contents

RA ASSEMBLY LOCATION DIAGRAM 5-1
R01 MOUNTING HARDWARE 5-2
R10 EXTERNAL COVERS, PANELS, ETC 5-4
R11 INTERNAL COMPONENTS 5-7
R30 PAPER STOCK ASSEMBLY 5-10
R35 PAPER DECK HEATER ASSEMBLY (ACCESSORY) 5-13
R40 PAPER PICK-UP ASSEMBLY 5-15
RB1 LIST OF CONNECTORS 5-19
RB2 LIST OF ELECTRIC PARTS 5-23

FIGURE RA
ASSEMBLY LOCATION DIAGRAM

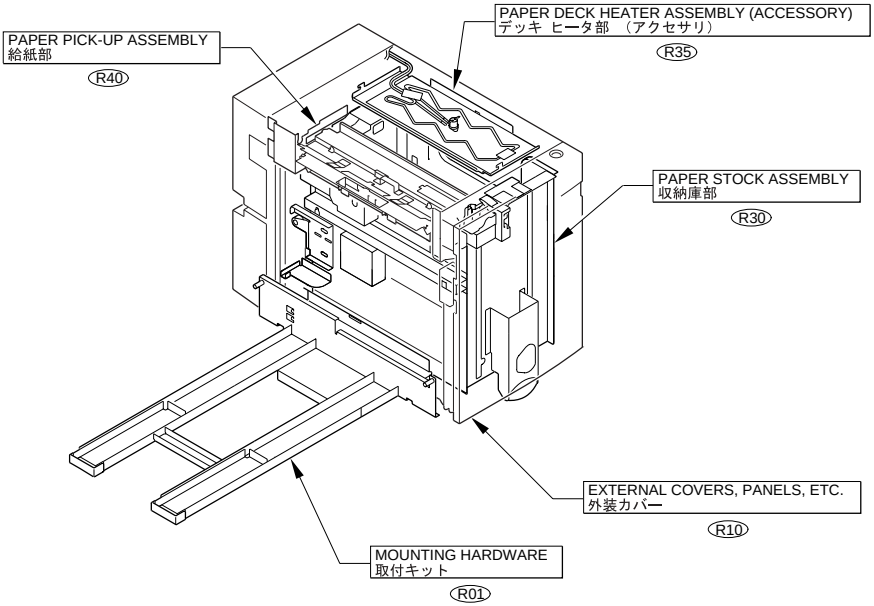

FIGURE R01
MOUNTING HARDWARE

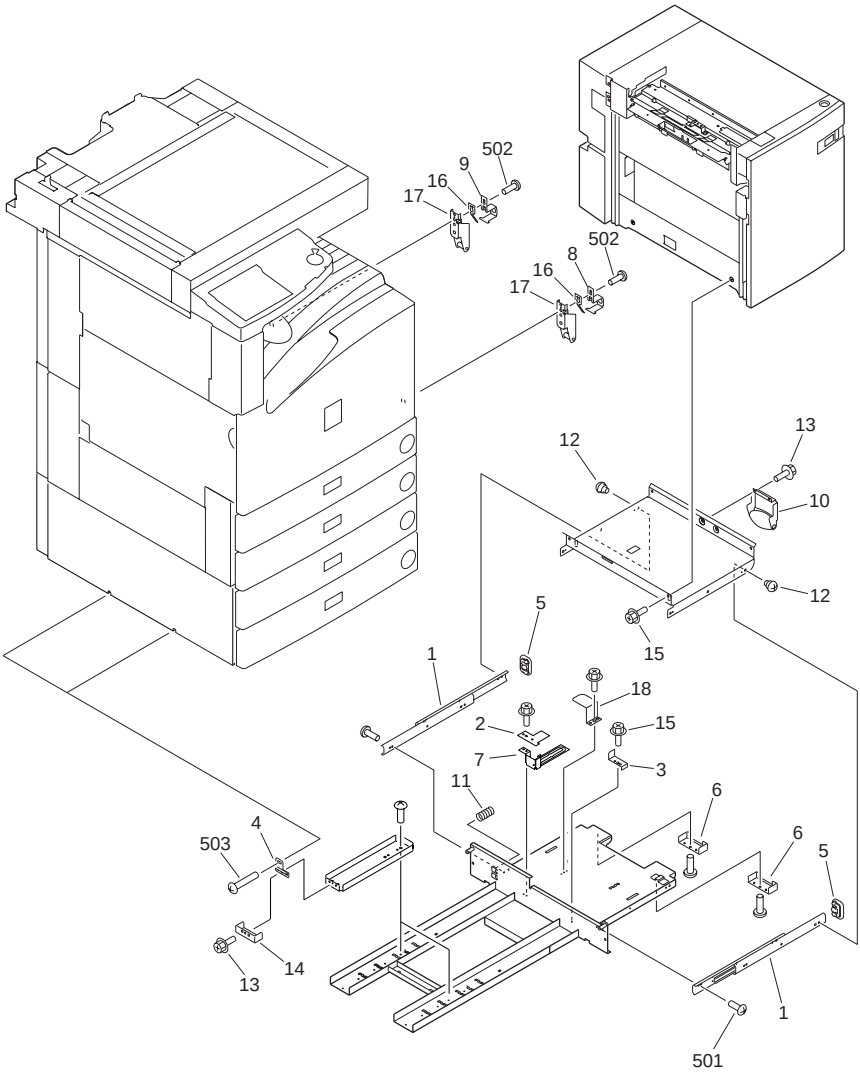

FIGURE & KEY NO.	PARTS NUMBER	RANK	Q'TY	DESCRIPTION	SERIAL NUMBER/ REMARKS	SVC
Fig.R01	NPN		RF	MOUNTING HARDWARE		
1	FB4-4867-020		2	RAIL, FRAME SLIDE		
2	FB4-4937-000		1	FLAG, SLIDE, UPPER		

FIGURE & KEY NO.	PARTS NUMBER	RANK	Q'TY	DESCRIPTION	SERIAL NUMBER/ REMARKS	SVC
3	FB4-4919-000		1	PLATE, DECK STOPPER		
4	FB4-4920-020		2	PLATE, CROSSMEMBER SUPPORT		
5	FB4-4932-000		2	CAP, RAIL		
6	FB4-4933-000		2	COVER, BOTTOM CROSSMEMBER		
7	FB4-4938-000		1	FLAG, SLIDE, LOWER		
8	FB4-6576-000		1	PLATE, LATCH, FRONT		
9	FB4-6577-000		1	PLATE, LATCH, REAR		
10	FF6-0315-030		1	SUPPORT, ROLLER		
11	FS6-2897-000		1	SPRING, COMPRESSION		
12	FS1-9002-000		3	SCREW,STEPPED,M4X5		
13	XA9-0732-000		5	SCREW,RS,M4X8		
14	FB4-4939-000		2	COVER, BOTTOM CROSSMEMBER, 2		
15	XA9-0732-000		AR	SCREW,RS,M4X8		
16	FB4-6578-000		2	SPRING, LEAF		
17	FF6-0316-000		2	PLATE, LATCH		
18	FB4-4918-020		1	PLATE, DECK SENSOR FLAG		
501	XB1-2400-609		15	SCREW,MACH.,TRUSS HEAD,M4X6		
502	XB1-2400-809		4	SCREW,MACH.,TRUSS HEAD,M4X8		
503	XB1-2401-207		2	SCREW,MACH.,TRUSS HEAD,M4X12		

FIGURE R10
EXTERNAL COVERS, PANELS, ETC

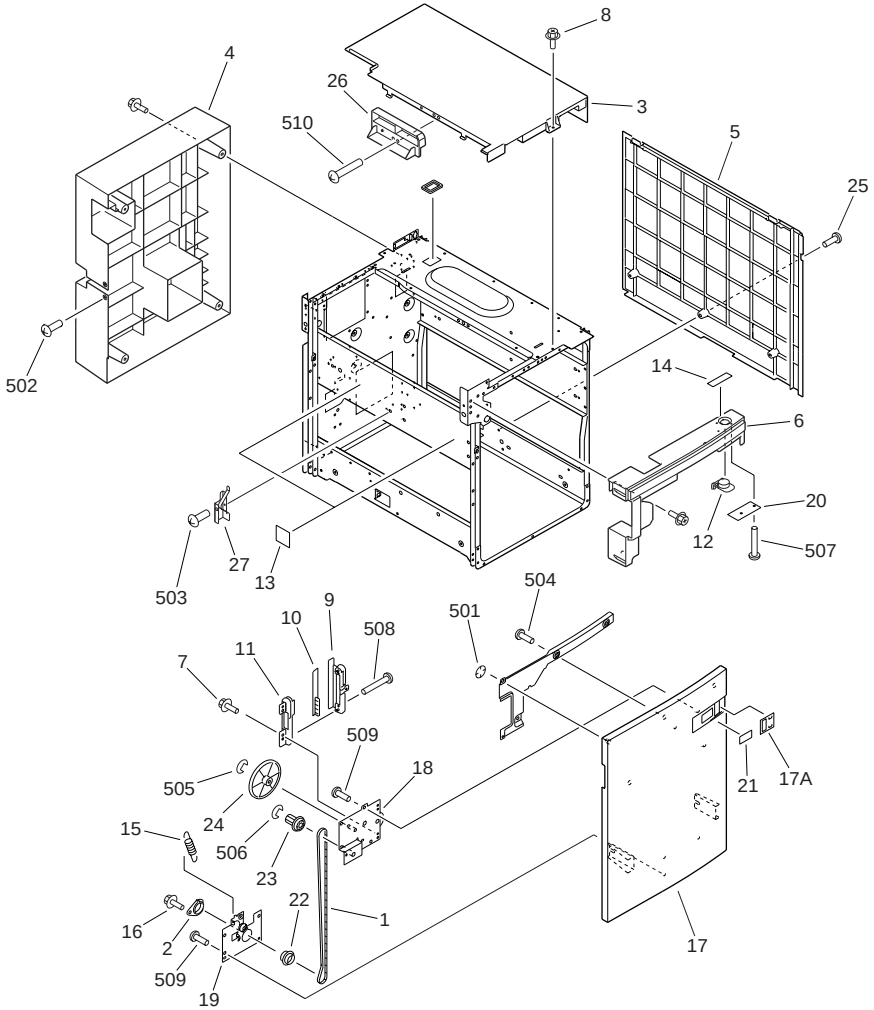

FIGURE & KEY NO.	PARTS NUMBER	RANK	Q'TY	DESCRIPTION	SERIAL NUMBER/ REMARKS	SVC
Fig.R10	NPN		RF	EXTERNAL COVERS, PANELS, ETC		
1	XF2-3228-532		1	BELT,DRIVE		
2	FB3-9270-000		1	BUSHING		
3	FB4-4926-000		1	COVER, UPPER		
4	FB5-5423-000		1	COVER, REAR		

FIGURE & KEY NO.	PARTS NUMBER	RANK	Q'TY	DESCRIPTION	SERIAL NUMBER/ REMARKS	SVC
5	FB5-5424-000		1	COVER, RIGHT		
6	FB4-4925-000		1	COVER, SWITCH		
7	XA9-0732-000		2	SCREW,RS,M4X8		
8	XA9-0732-000		AR	SCREW,RS,M4X8		
9	FB3-9291-000		1	MOUNT, PAPER INDEX, RIGHT		
10	FB3-9292-000		1	TAPE, PAPER INDEX		
11	FB3-9293-000		1	MOUNT, PAPER INDEX, LEFT		
12	FB3-9711-000		1	BUTTON, RELEASE		
13	FB3-9749-000		2	LABEL, 'HANDLE'		
14	FB3-9751-000		1	LABEL, 'DECK OPEN'	MATERIAL: PAPER	
15	FS6-2677-000		1	SPRING, TENSION		
16	XA9-0732-000		1	SCREW,RS,M4X8		
17	FF5-8912-000		1	COVER, FRONT		
17A	FB3-9732-000		1	PANEL, PAPER INDEX		
18	FF5-6163-030		1	PAPER QUANTITY INDICATOR UNIT		
19	FF5-6164-020		1	TENSIONER		
20	FG5-9288-020		1	SWITCH PCB ASSEMBLY		
21	FS6-8412-000		1	SHEET, PAPER SIZE		
22	FS7-0423-000		1	PULLEY,41T		
23	FS6-0912-000		1	PULLEY, 32T/GEAR, 15T		
24	FS6-0913-000		1	GEAR, 18T/96T		
25	XA9-0266-000		1	SCREW,W/WASHER,M4X8		
26	FB5-5425-000		1	COVER, HANDLE		
27	FB5-5430-020		1	PLATE, SLOPE GUIDE		
501	XD2-2300-402		1	RING,TOOTHED LOCK		
502	XB1-2300-806		2	SCREW,MACH.,TRUSS HEAD,M3X8		
503	XB1-2400-609		2	SCREW,MACH.,TRUSS HEAD,M4X6		
504	XB4-7400-807		3	SCREW,TAPPING,TRUSS HEAD,M4X8		
505	XD2-1100-502		1	RING,E		
506	XD2-1100-642		1	RING,E		
507	XB4-7301-209		2	SCREW,TAPPING,TRUSS HEAD,M3X12		
508	XB4-7301-209		2	SCREW,TAPPING,TRUSS HEAD,M3X12		

FIGURE & KEY NO.	PARTS NUMBER	RANK	Q'TY	DESCRIPTION	SERIAL NUMBER/ REMARKS	SVC
509	XB4-7400-807		5	SCREW,TAPPING,TRUSS HEAD,M4X8		
510	XB4-7401-006		1	SCREW,TAPPING,TRUSS HEAD,M4X10		

FIGURE R11
INTERNAL COMPONENTS

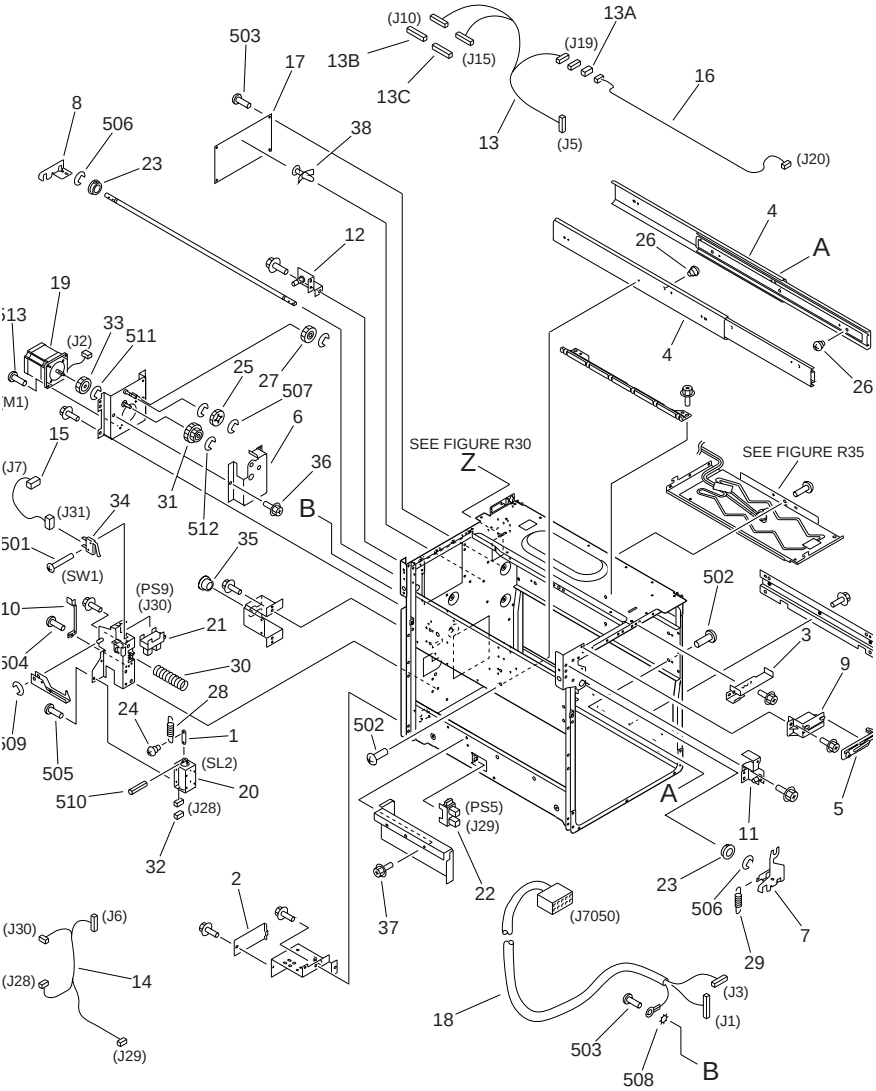

FIGURE & KEY NO.	PARTS NUMBER	RANK	Q'TY	DESCRIPTION	SERIAL NUMBER/ REMARKS	SVC
Fig.R11	NPN		RF	INTERNAL COMPONENTS		
1	FA6-7751-000		1	ARM, LOCK		
2	FB2-8293-000		1	COVER, CONNECTOR		

FIGURE & KEY NO.	PARTS NUMBER	RANK	Q'TY	DESCRIPTION	SERIAL NUMBER/ REMARKS	SVC
3	FB3-9260-000		1	PLATE, CAM RELEASE		
4	FB3-9261-020		2	RAIL, SLIDE		
5	FB3-9290-000		1	LINK, RELEASE LEVER		
6	FB5-5422-020		1	COVER, GEAR		
7	FB4-4877-000		1	HOOK, FRONT		
8	FB4-4878-000		1	HOOK, REAR		
9	FB4-4922-000		1	COVER, RELEASE LEVER		
10	FB4-4929-000		1	SPRING, LEAF		
11	FF5-7535-050		1	PIN, DECK, FRONT		
12	FF5-7536-050		1	PIN, DECK, REAR		
13	FG3-1712-020		1	CABLE, FRAME, 1	J5,10,15,19	
13A	VS1-7177-004		1	CONNECTOR, SNAP TIGHT	J19	
13B	VS1-7177-010		1	CONNECTOR, SNAP TIGHT	J10	
13C	VS1-7177-014		1	CONNECTOR, SNAP TIGHT	J15	
14	FG6-2528-000		1	CABLE, FRAME, 2	J6,28-30	
15	FG6-2529-000		1	CABLE, PAPER STOCK SWITCH	J7,31	
16	FG6-1646-000		1	CABLE, LED SWITCH	J19,20	
17	FG3-1711-030		1	DECK CONTROLLER PCB ASSEMBLY		
18	FG3-1713-000		1	CABLE, INTERFACE	J1,3,7050	
19	FH6-1571-020		1	MOTOR, STEPPING, DC24V	M1 J2	
20	FK2-0127-000		1	SOLENOID, DC24V	SL2 J28	
21	FK2-0149-000		1	PHOTO-INTERRUPTER	PS9 J30	
22	FK2-0149-000		1	PHOTO-INTERRUPTER	PS5 J29	
23	FS1-1189-000		2	BUSHING		
24	FS1-9009-000		1	SCREW,STEPPED,M3		
25	FS2-0544-000		1	GEAR, 24T		
26	FS2-9343-000		4	SCREW,STEPPED,M4		
27	FS2-0545-000		1	GEAR, 28T		
28	FS6-2593-000		1	SPRING, TENSION		
29	FS6-2674-000		1	SPRING, TENSION		
30	FS6-2676-000		1	SPRING, COMPRESSION		
31	FS7-0802-000		1	GEAR, 20T/35T		

FIGURE & KEY NO.	PARTS NUMBER	RANK	Q'TY	DESCRIPTION	SERIAL NUMBER/ REMARKS	SVC
32	VS1-7177-002		1	CONNECTOR, SNAP TIGHT	J28	
33	FS7-0801-000		1	GEAR, 24T		
34	WC4-5153-000		1	MICRO SWITCH	SW1 J31	
35	WT2-5410-000		1	BUSHING		
36	XA9-0732-000		16	SCREW,RS,M4X8		
37	XA9-0732-000		2	SCREW,RS,M4X8		
38	WT2-5848-000		1	SPACER, SUPPORT		
501	XB1-2231-009		1	SCREW,MACH.,TRUSS HEAD,M2.3X10		
502	XB1-2400-609		6	SCREW,MACH.,TRUSS HEAD,M4X6		
503	XB1-2400-806		8	SCREW,MACH.,TRUSS HEAD,M4X8		
504	XB1-2400-809		4	SCREW,MACH.,TRUSS HEAD,M4X8		
505	XB6-7300-409		3	SCREW,TP,M3X4		
506	XD2-1100-642		2	RING,E		
507	XD2-1100-642		4	RING,E		
508	XD1-4200-402		1	WASHER,TOOTHED LOCK		
509	XD2-1100-502		1	RING,E		
510	XD3-1300-102		1	PIN,SPRING		
511	XD2-1100-402		1	RING,E		
512	XD2-1100-502		1	RING,E		
513	XB1-2400-609		2	SCREW,MACH.,TRUSS HEAD,M4X6		

FIGURE R30
PAPER STOCK ASSEMBLY

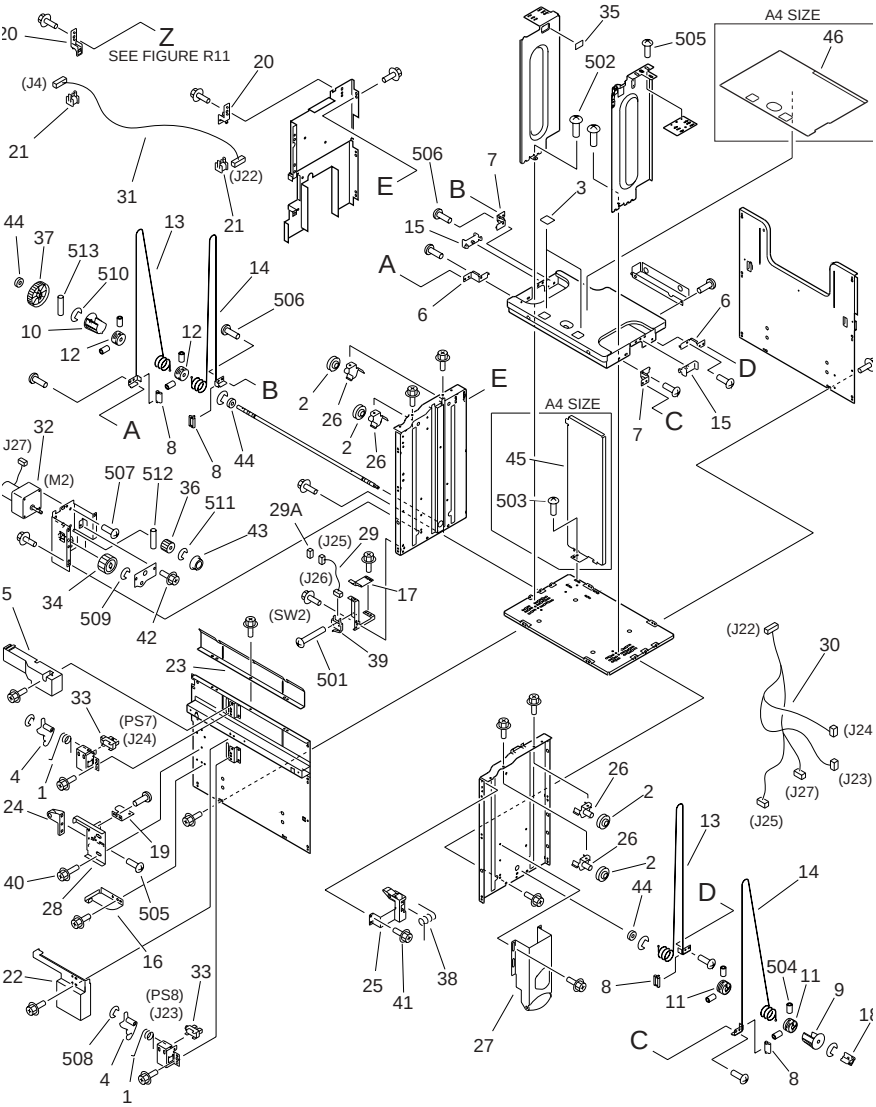

NOTE:This assembly does not include the parts shown with key No. 16,18,27,45,46 and 503.

注：このユニットにKey No.16,18,27,45,46,503の部品は含まれません。

FIGURE & KEY NO.	PARTS NUMBER	RANK	Q'TY	DESCRIPTION	SERIAL NUMBER/ REMARKS	SVC
Fig.R30	FG6-3577-050		1	PAPER STOCK ASSEMBLY		
1	FB5-0553-000		2	SPRING, TORSION		
2	FA6-8257-000		4	PULLEY		
3	FB2-7740-020		2	SHEET, SEPARATION		
4	FB2-9248-000		2	ARM, PAPER SENSOR		
5	FB3-9235-000		1	COVER, SENSOR		
6	FB3-9237-000		2	PLATE, WIRE STOP, RIGHT		
7	FB3-9238-000		2	PLATE, WIRE STOP, LEFT		
8	FB3-9240-000		4	BLOCK, WIRE GUIDE		
9	FB3-9241-000		1	GUIDE, PULLEY, FRONT		
10	FB3-9242-000		1	GUIDE, PULLEY, REAR		
11	FB3-9243-000		2	PULLEY, DRIVE, FRONT		
12	FB3-9244-000		2	PULLEY, DRIVE, REAR		
13	FB4-9706-020		2	WIRE, DRIVE, RIGHT		
14	FB4-9705-020		2	WIRE, DRIVE, LEFT		
15	FB3-9714-000		2	BLOCK, LIFTER PLATE SLIDE		
16	FB3-9720-000		1	PLATE, PAPER STOCK STOP	SEE NOTE	
17	FB3-9723-000		1	SPRING, LEAF		
18	FB3-9735-000		1	COUPLING	SEE NOTE	
19	FB3-9742-000		1	FLAG, PAPER STOCK SENSOR		
20	FB4-4873-000		2	CLAMP, CORD, UPPER		
21	FB4-4874-000		2	CLAMP, CORD, LOWER		
22	FB4-4882-000		1	COVER, SENSOR, LOWER		
23	FB4-4928-000		1	PLATE, SEPARATION		
24	FF5-5282-030		1	HOLDER, LATCH		
25	FF5-6148-030		1	LEVER, RELEASE		
26	FF5-6160-000		4	MOUNT, PULLEY		
27	FF5-6161-000		1	MOUNT, ROLLER	SEE NOTE	
28	FF5-6171-000		1	PLATE, LOCK		
29	FG6-1642-020		1	CABLE, SWITCH	J25,26	
29A	VS1-7177-003		1	CONNECTOR, SNAP TIGHT	J25	
30	FG6-2534-000		1	CABLE, PAPER STOCK	J22-25,27	

FIGURE & KEY NO.	PARTS NUMBER	RANK	Q'TY	DESCRIPTION	SERIAL NUMBER/ REMARKS	SVC
31	FG6-2531-010		1	CABLE, PAPER STOCK CONNECTING	J4,22	
32	FK2-0262-000		1	MOTOR, DC24V	M2 J27	
33	FK2-0149-000		2	PHOTO-INTERRUPTER	PS7,8 J24,23	
34	FS2-0450-000		1	GEAR, 32T		
35	FS5-8618-000		1	LABEL, 'MAXIMUM LOAD'		
36	FS6-0722-000		1	GEAR, 19T		
37	FS6-0909-000		1	GEAR, 58T		
38	FS6-2673-000		1	SPRING, TORSION		
39	WC4-0153-000		1	MICROSWITCH	SW2 J26	
40	XA9-0721-000		2	SCREW,RS,M4X10		
41	XA9-0732-000		47	SCREW,RS,M4X8		
42	XA9-0732-000		2	SCREW,RS,M4X8		
43	XG3-6012-405		1	BALL BEARING, NSK MF126ZZ		
44	XG9-0250-000		3	BEARING, BALL		
45	FB4-9713-020		1	PLATE, END LIMIT	A4 SIZE SEE NOTE	
46	FB5-7009-000		1	SHEET, DECK	A4 SIZE SEE NOTE	
501	XB1-2231-009		1	SCREW,MACH.,TRUSS HEAD,M2.3X10		
502	XB1-2400-609		2	SCREW,MACH.,TRUSS HEAD,M4X6		
503	XB1-2400-609		1	SCREW,MACH.,TRUSS HEAD,M4X6	A4 SIZE SEE NOTE	
504	XB6-2400-808		8	SETSCREW,M4X8		
505	XB6-7400-609		5	SCREW,TP,M4X6		
506	XB6-7400-809		14	SCREW,TP,M4X8		
507	XB6-7400-809		4	SCREW,TP,M4X8		
508	XD2-1100-242		2	RING,E		
509	XD2-1100-502		1	RING,E		
510	XD2-1100-642		4	RING,E		
511	XD2-1100-642		1	RING,E		
512	XD3-2200-122		1	PIN,DOWEL		
513	XD3-2200-182		1	PIN,DOWEL		

FIGURE R35
PAPER DECK HEATER ASSEMBLY (ACCESSORY)

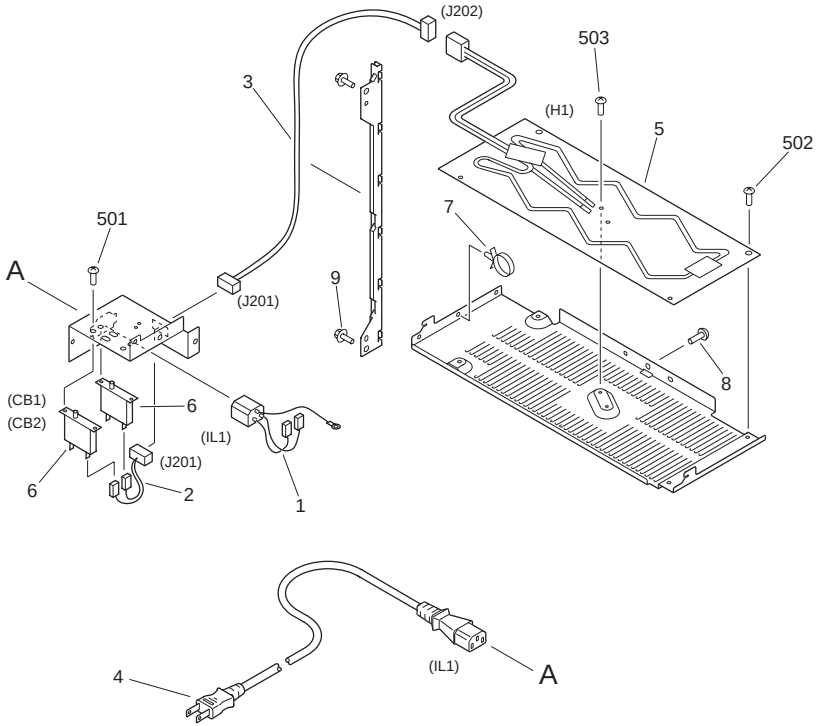

FIGURE & KEY NO.	PARTS NUMBER	RANK	Q'TY	DESCRIPTION	SERIAL NUMBER/ REMARKS	SVC
Fig.R35	NPN		RF	PAPER DECK HEATER ASSEMBLY	ACCESSORY 100V	
1	FF3-3462-000		1	CABLE, SOCKET	IL1	
2	FF3-3464-000		1	CABLE, RELAY	J201	
3	FG6-2956-010		1	CABLE, CASSETTE HEATER	J201,202	
4	FH2-5759-000		1	CORD, POWER	IL1	
5	FH7-4584-000		1	HEATER, CASSETTE	H1 J202	
6	VD7-0502-001		2	BREAKER, CIRCUIT, 125VAC 3A	CB1,2	
7	WT2-5041-000		1	TIE, CABLE		
8	XA9-0266-000		1	SCREW,W/WASHER,M4X8		
9	XB3-6400-809		2	SCREW,RS,M4X8		
501	XB1-2300-409		4	SCREW,MACH.,TRUSS HEAD,M3X4		
502	XB1-2400-409		4	SCREW,MACH.,TRUSS HEAD,M4X4		

FIGURE & KEY NO.	PARTS NUMBER	RANK	Q'TY	DESCRIPTION	SERIAL NUMBER/ REMARKS	SVC
503	XB6-7300-409		1	SCREW,TP,M3X4		

FIGURE R40
PAPER PICK-UP ASSEMBLY

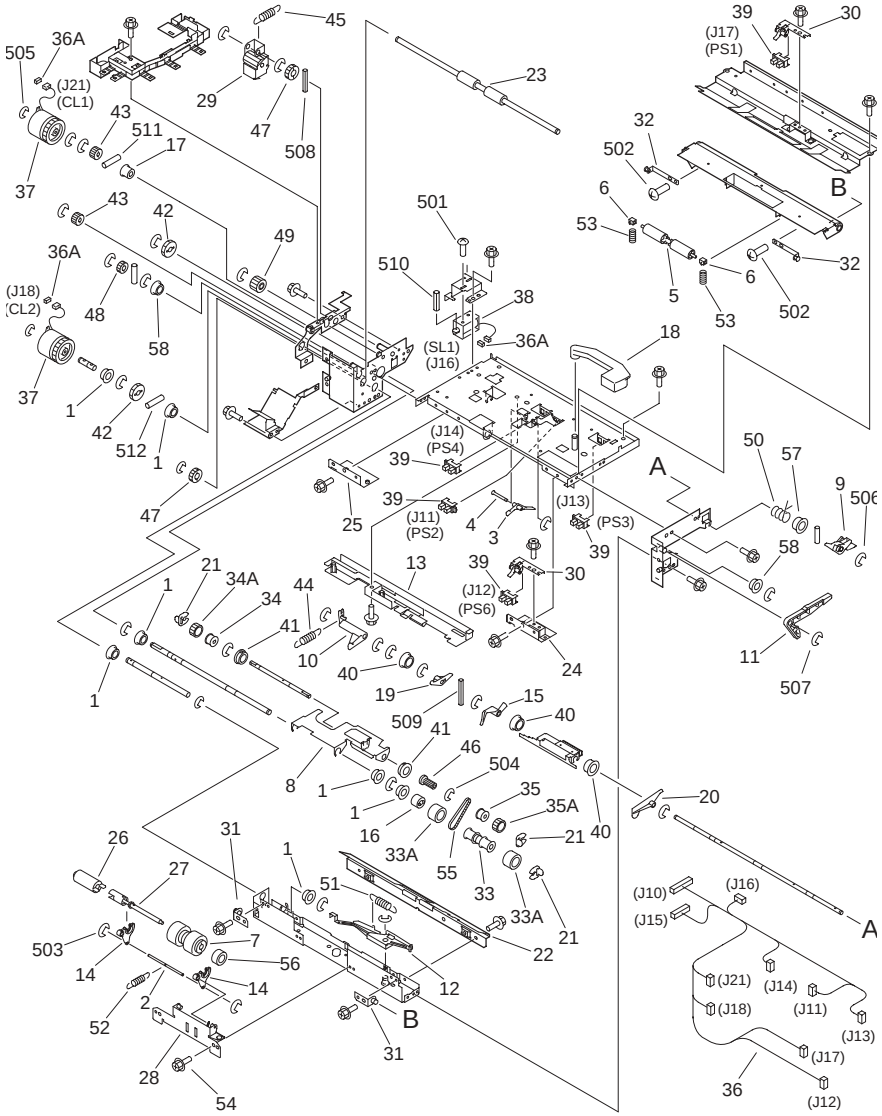

NOTE:This assembly does not include the part shown with key No. 18.

注：このユニットにKey No.18の部品は含まれません。

FIGURE & KEY NO.	PARTS NUMBER	RANK	Q'TY	DESCRIPTION	SERIAL NUMBER/ REMARKS	SVC
Fig.R40	FG6-6011-000		1	PAPER PICK-UP ASSEMBLY		
1	FA9-2112-000		7	BUSHING		
2	FB4-6227-000		1	SHAFT, COUNTER		
3	FB2-7720-000		1	LEVER, PAPER		
4	FB2-7721-000		1	SHAFT, LEVER		
5	FB2-7754-030		1	ROLLER		
6	FB2-7755-000		2	BUSHING		
7	FB2-7777-020		1	ROLLER, SEPARATION		
8	FB3-9188-020		1	PLATE, PAPER PICK-UP		
9	FB3-9192-020		1	CAM, FRONT		
10	FB3-9193-020		1	ARM, SOLENOID		
11	FB3-9195-020		1	ARM, SEPARATION RELEASE		
12	FB3-9196-020		1	LEVER, SEPARATION RELEASE		
13	FB3-9206-000		1	COVER, SENSOR		
14	FB3-9207-030		2	ARM, SEPARATION ROLLER		
15	FB3-9214-000		1	FLAG, PAPER SENSOR		
16	FB3-9216-000		1	CLUTCH, ONE-WAY, 1		
17	FB3-9217-000		1	CLUTCH, ONE-WAY, 2		
18	FB3-9289-000		1	LEVER, RELEASE	SEE NOTE	
19	FB3-9713-000		1	LEVER, PAPER PICK-UP		
20	FB3-9752-000		1	LEVER, LIMITER		
21	FB4-2007-000		3	RING, RETAINING		
22	FB4-2013-000		1	GUIDE, PICK-UP INLET		
23	FB4-4868-020		1	ROLLER, PAPER FEED		
24	FB4-4898-000		1	PLATE, PAPER FEED GUIDE, FRONT		
25	FB4-4899-000		1	PLATE, PAPER FEED GUIDE, REAR		
26	FB2-8422-000		1	TORQUE LIMITER		
27	FF5-6338-000		1	SHAFT, SEPARATION		
28	FF5-6157-020		1	MOUNT, SEPARATION ROLLER		
29	FF5-7529-000		1	SWING GEAR, 20T		
30	FF5-7530-020		2	MOUNT, VERT. PATH SENSOR FLAG		
31	FF5-7532-000		2	SUPPORT, GUIDE, LOWER		

FIGURE & KEY NO.	PARTS NUMBER	RANK	Q'TY	DESCRIPTION	SERIAL NUMBER/ REMARKS	SVC
32	FF6-1976-020		2	SUPPORT, ROLLER		
33	FF5-7541-000		1	ROLLER, PAPER FEED		
33A	FB4-2034-000		2	ROLLER, FEED		
34	FF5-7829-000		1	ROLLER, PAPER PICK-UP, 1		
34A	FB4-2033-000		1	ROLLER, PICK-UP		
35	FF5-7830-030		1	ROLLER, PAPER PICK-UP, 2		
35A	FB4-2033-000		1	ROLLER, PICK-UP		
36	FG6-1641-020		1	CABLE, PAPER PICK-UP	J10-18,21	
36A	VS1-7177-002		3	CONNECTOR, SNAP TIGHT	J16,18,21	
37	FH7-5826-020		2	CLUTCH, ELECTROMAGNETIC	CL1,2 J21,18	
38	FK2-0126-000		1	SOLENOID	SL1 J16	
39	FK2-0149-000		5	PHOTO-INTERRUPTER	PS1-4,6J17,11,13,14,12	
40	FS1-1512-000		1	BUSHING		
41	FS1-1569-000		2	BUSHING		
42	FS2-0484-000		2	GEAR, 25T		
43	FS5-0338-000		2	GEAR, 16T		
44	FS5-2291-000		1	SPRING, TENSION		
45	FS5-2885-000		1	SPRING, TENSION		
46	FS5-3333-000		1	PULLEY, 16T		
47	FS6-0053-020		2	GEAR, 20T		
48	FS6-0091-000		1	GEAR, 16T		
49	FS6-0907-000		1	GEAR, 20T		
50	FS5-7441-000		1	SPRING, TORSION		
51	FS6-2675-020		1	SPRING, TENSION		
52	FS6-2678-030		1	SPRING, TENSION		
53	FS6-2895-000		2	SPRING, COMPRESSION		
54	XA9-0732-000		27	SCREW,RS,M4X8		
55	XF9-0525-000		1	BELT, TIMING, 59T		
56	XG9-0242-000		1	BEARING, BALL		
57	FS5-7442-000		1	BUSHING		
58	FS1-1189-000		2	BUSHING		
501	XB1-2300-409		2	SCREW,MACH.,TRUSS HEAD,M3X4		

FIGURE & KEY NO.	PARTS NUMBER	RANK	Q'TY	DESCRIPTION	SERIAL NUMBER/ REMARKS	SVC
502	XB1-2400-609		2	SCREW,MACH.,TRUSS HEAD,M4X6		
503	XD2-1100-242		2	RING,E		
504	XD2-1100-372		1	RING,E		
505	XD2-1100-402		1	RING,E		
506	XD2-1100-502		10	RING,E		
507	XD2-1100-642		18	RING,E		
508	XD3-1200-122		1	PIN,SPRING		
509	XD3-1200-142		1	PIN,SPRING		
510	XD3-1300-082		1	PIN,SPRING		
511	XD3-2200-102		6	PIN,DOWEL		
512	XD3-2200-142		2	PIN,DOWEL		

FIGURE RB1
LIST OF CONNECTORS

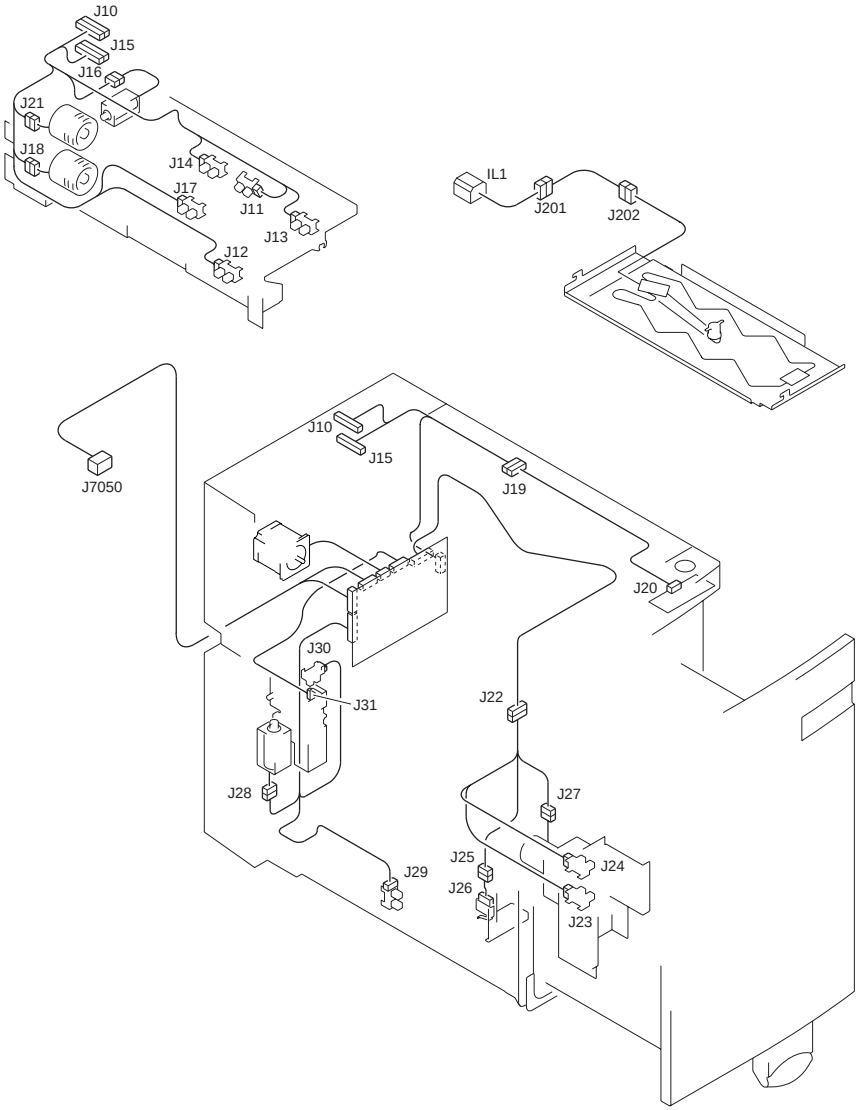

FIGURE & KEY NO.	PARTS NUMBER	RANK	Q'TY	DESCRIPTION	SERIAL NUMBER/ REMARKS	SVC
Fig.RB1	NPN		RF	LIST OF CONNECTORS		
IL1	NPN			POWER CORD SUPPLY	ACCESSORY 100V	

FIGURE & KEY NO.	PARTS NUMBER	RANK	Q'TY	DESCRIPTION	SERIAL NUMBER/ REMARKS	SVC
IL1	WS5-5025-000		1	SOCKET, AC	ACCESSORY 100V	
J1	PCB			SIDE DECK DRIVER		
J1	VS1-0852-007		1	CONNECTOR, 7P, FEMALE		
J2	PCB			SIDE DECK DRIVER		
J2	NPN			DECK MAIN MOTOR	M1	
J3	PCB			SIDE DECK DRIVER		
J3	VS3-5083-003		1	CONNECTOR, 3P, FEMALE		
J3	WS3-5160-000		3	SOCKET CONTACT, 18-24AWG		
J4	PCB			SIDE DECK DRIVER		
J4	VS1-6302-010		1	CONNECTOR, 10P, FEMALE		
J4	WS3-5569-000		10	PIN, CONTACT		
J5	PCB			SIDE DECK DRIVER		
J5	VT2-5161-026		1	HOLDER, CONNECTOR, 26P		
J5	VS1-6313-013		1	CONNECTOR, 13P, FEMALE		
J5	VS1-6314-013		1	CONNECTOR, 13P, FEMALE		
J6	PCB			SIDE DECK DRIVER		
J6	VS1-6314-008		1	CONNECTOR, 8P, FEMALE		
J7	PCB			SIDE DECK DRIVER		
J7	VS1-6302-003		1	CONNECTOR, 3P, FEMALE		
J7	WS3-5569-000		2	PIN, CONTACT		
J10	VS1-6320-010		1	CONNECTOR, 10P, FEMALE		
J10	VS1-6321-010		1	CONNECTOR, 10P, FEMALE		
J10	VS1-7177-010		1	CONNECTOR, SNAP TIGHT		
J11	NPN			DECK PAPER EMPTY SENSOR	PS2	
J11	VS1-6321-003		1	CONNECTOR, 3P, FEMALE		
J12	NPN			DECK PAPER FEED SENSOR	PS6	
J12	VS1-6321-003		1	CONNECTOR, 3P, FEMALE		
J13	NPN			DECK LIFTER UPPER LIMIT SENSOR	PS3	
J13	VS1-6321-003		1	CONNECTOR, 3P, FEMALE		
J14	NPN			DECK LIFTER POSITION SENSOR	PS4	
J14	VS1-6321-003		1	CONNECTOR, 3P, FEMALE		
J15	VS1-6320-014		1	CONNECTOR, 14P, FEMALE		

FIGURE & KEY NO.	PARTS NUMBER	RANK	Q'TY	DESCRIPTION	SERIAL NUMBER/ REMARKS	SVC
J15	VS1-6321-014		1	CONNECTOR, 14P, FEMALE		
J15	VS1-7177-014		1	CONNECTOR, SNAP TIGHT		
J16	NPN			DECK ROLLER RELEASE SOLENOID	SL1	
J16	VS1-6321-002		1	CONNECTOR, 2P, FEMALE		
J16	VS1-7177-002		1	CONNECTOR, SNAP TIGHT		
J17	NPN			DECK PAPER PICK-UP SENSOR	PS1	
J17	VS1-6321-003		1	CONNECTOR, 3P, FEMALE		
J18	NPN			DECK PAPER PICK-UP CLUTCH	CL2	
J18	VS1-6321-002		1	CONNECTOR, 2P, FEMALE		
J18	VS1-7177-002		1	CONNECTOR, SNAP TIGHT		
J19	VS1-6320-004		1	CONNECTOR, 4P, FEMALE		
J19	VS1-6321-004		1	CONNECTOR, 4P, FEMALE		
J19	VS1-7177-004		1	CONNECTOR, SNAP TIGHT		
J20	PCB			LED SWITCH		
J20	VS1-6321-004		1	CONNECTOR, 4P, FEMALE		
J21	NPN			DECK PAPER FEED CLUTCH	CL1	
J21	VS1-6321-002		1	CONNECTOR, 2P, FEMALE		
J21	VS1-7177-002		1	CONNECTOR, SNAP TIGHT		
J22	VS1-6373-010		1	CONNECTOR, 10P, FEMALE		
J22	VS1-6372-010		1	CONNECTOR, 10P, FEMALE		
J22	WS3-5569-000		10	PIN, CONTACT		
J22	WS3-5598-000		10	PIN CONTACT		
J23	NPN			DECK PAPER SENSOR	PS8	
J23	VS1-6321-003		1	CONNECTOR, 3P, FEMALE		
J24	NPN			DECK PAPER POSITION SENSOR	PS7	
J24	VS1-6321-003		1	CONNECTOR, 3P, FEMALE		
J25	VS1-6321-003		2	CONNECTOR, 3P, FEMALE		
J25	VS1-7177-003		1	CONNECTOR, SNAP TIGHT		
J26	NPN			DECK LOWER DETECT SWITCH	SW2	
J26	RH2-5283-000		1	CONNECTOR, 2P, FEMALE		
J26	WS3-5419-000		2	SOCKET CONTACT, 22-26AWG		
J27	NPN			DECK LIFTER MOTOR	M2	

FIGURE & KEY NO.	PARTS NUMBER	RANK	Q'TY	DESCRIPTION	SERIAL NUMBER/ REMARKS	SVC
J27	VS1-0279-002		1	CONNECTOR, 2P, FEMALE		
J27	WS3-0437-000		2	SOCKET CONTACT, 20-30AWG		
J28	NPN			DECK OPEN SOLENOID	SL2	
J28	VS1-6321-002		1	CONNECTOR, 2P, FEMALE		
J29	NPN			DECK POSITION SENSOR	PS5	
J29	VS1-6321-003		1	CONNECTOR, 3P, FEMALE		
J30	NPN			DECK OPEN SENSOR	PS9	
J30	VS1-6321-003		1	CONNECTOR, 3P, FEMALE		
J31	NPN			DECK OPEN DETECT SWITCH	SW1	
J31	RH2-5283-000		1	CONNECTOR, 2P, FEMALE		
J31	WS3-5419-000		2	SOCKET CONTACT, 22-26AWG		
J201	VS4-0001-003		1	CONNECTOR, 3P, MALE	ACCESSORY 100V	
J201	VS4-0002-003		1	CONNECTOR, 3P, FEMALE	ACCESSORY 100V	
J201	WS4-0219-000		2	PIN CONTACT, 18-22AWG	ACCESSORY 100V	
J201	WS4-0217-000		2	SOCKET CONTACT, 22-18AWG	ACCESSORY 100V	
J202	NPN			DECK HEATER	ACCESSORY 100V H1	
J202	VS4-0001-003		1	CONNECTOR, 3P, MALE	ACCESSORY 100V	
J202	WS4-0219-000		2	PIN CONTACT, 18-22AWG	ACCESSORY 100V	
J7050	SYS			COPIER		
J7050	FK2-0212-000		1	HOUSING		
J7050	VS1-5452-008		1	CONNECTOR, 8P, FEMALE		
J7050	WS3-5018-000		4	SOCKET, CONTACT, AWG18-24		

FIGURE RB2
LIST OF ELECTRIC PARTS

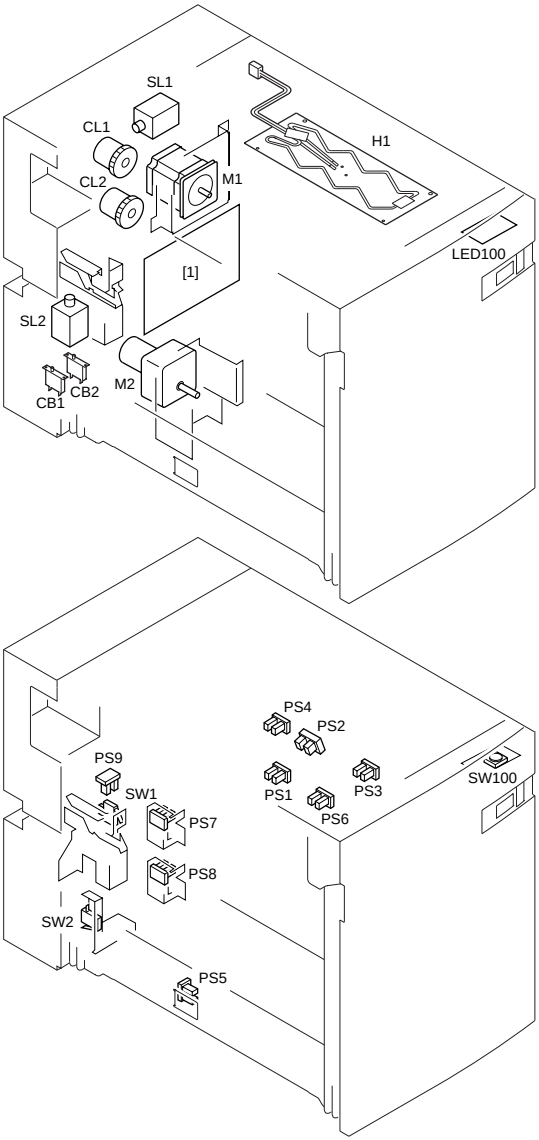

FIGURE & KEY NO.	PARTS NUMBER	RANK	Q'TY	DESCRIPTION	SERIAL NUMBER/ REMARKS	SVC
Fig.RB2	NPN		RF	LIST OF ELECTRIC PARTS		

FIGURE & KEY NO.	PARTS NUMBER	RANK	Q'TY	DESCRIPTION	SERIAL NUMBER/ REMARKS	SVC
1	FG3-1711-030		1	DECK CONTROLLER PCB ASSEMBLY		
CB1	VD7-0502-001		1	BREAKER, CIRCUIT, 125VAC 3A	ACCESSORY 100V	
CB2	VD7-0502-001		1	BREAKER, CIRCUIT, 125VAC 3A	ACCESSORY 100V	
CL1	FH7-5826-020		1	CLUTCH, ELECTROMAGNETIC		
CL2	FH7-5826-020		1	CLUTCH, ELECTROMAGNETIC		
H1	FH7-4584-000		1	HEATER, CASSETTE	ACCESSORY 100V	
LED100	FG5-9288-020		1	SWITCH PCB ASSEMBLY		
M1	FH6-1571-020		1	MOTOR, STEPPING, DC24V		
M2	FK2-0262-000		1	MOTOR, DC24V		
PS1	FK2-0149-000		1	PHOTO-INTERRUPTER		
PS2	FK2-0149-000		1	PHOTO-INTERRUPTER		
PS3	FK2-0149-000		1	PHOTO-INTERRUPTER		
PS4	FK2-0149-000		1	PHOTO-INTERRUPTER		
PS5	FK2-0149-000		1	PHOTO-INTERRUPTER		
PS6	FK2-0149-000		1	PHOTO-INTERRUPTER		
PS7	FK2-0149-000		1	PHOTO-INTERRUPTER		
PS8	FK2-0149-000		1	PHOTO-INTERRUPTER		
PS9	FK2-0149-000		1	PHOTO-INTERRUPTER		
SL1	FK2-0126-000		1	SOLENOID		
SL2	FK2-0127-000		1	SOLENOID, DC24V		
SW1	WC4-5153-000		1	MICRO SWITCH		
SW2	WC4-0153-000		1	MICROSWITCH		
SW100	FG5-9288-020		1	SWITCH PCB ASSEMBLY		

Inner 2way Tray-A1(Parts Catalog)

Inner 2way Tray-A1

F25-7801 **XEF00001-**

Contents

QA ASSEMBLY LOCATION DIAGRAM 6-1
Q01 MOUNTING HARDWARE 6-2
Q30 DELIVERY ASSEMBLY 6-4
QB1 LIST OF CONNECTORS 6-9
QB2 LIST OF ELECTRIC PARTS 6-11

FIGURE QA
ASSEMBLY LOCATION DIAGRAM

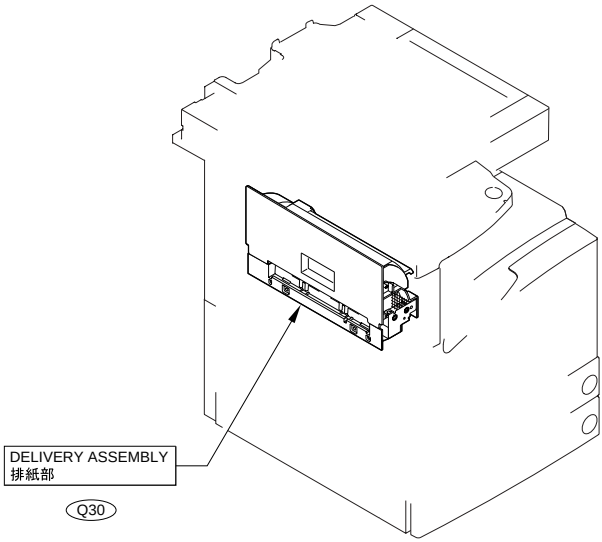

FIGURE Q01
MOUNTING HARDWARE

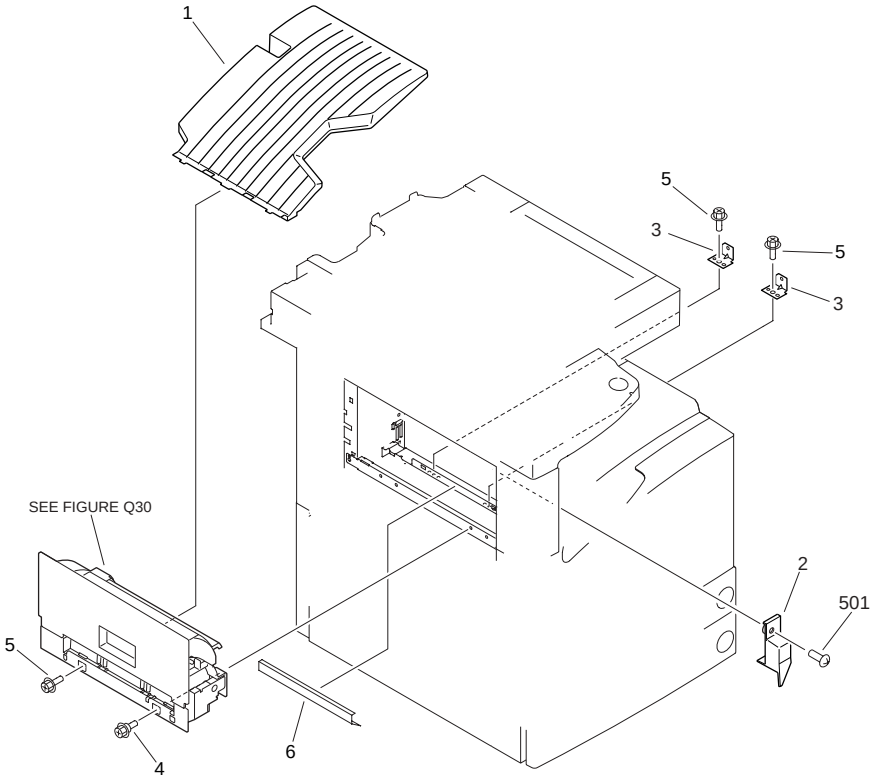

FIGURE & KEY NO.	PARTS NUMBER	RANK	Q'TY	DESCRIPTION	SERIAL NUMBER/ REMARKS	SVC
Fig.Q01	NPN		RF	MOUNTING HARDWARE		
1	FB5-4886-000		1	TRAY, DELIVERY, 2		
2	FB5-4901-000		1	COVER, DELIVERY CONNECTOR		
3	FB5-4902-000		2	MOUNT, DELIVERY		
4	FS5-9661-000		1	SCREW,STEPPED,RS,M4		
5	XA9-0629-000		3	SCREW,RS,M4X8		
6	FB5-9811-000		1	SHEET, PROTECTIVE		
501	XB1-2401-406		1	SCREW,MACH.,TRUSS HEAD,M4X14		
	4A1-2635-000		1	COVER6		
	4A1-2636-000		1	COVER1		
	4A1-2637-000		1	COVER4		

FIGURE & KEY NO.	PARTS NUMBER	RANK	Q'TY	DESCRIPTION	SERIAL NUMBER/ REMARKS	SVC
	FB5-6141-000		1	COVER2		
	FB5-6142-000		1	COVER3		
	FB5-6144-000		1	COVER5		
	FB5-6145-000		2	BASE SUPPORT		

FIGURE Q30
DELIVERY ASSEMBLY

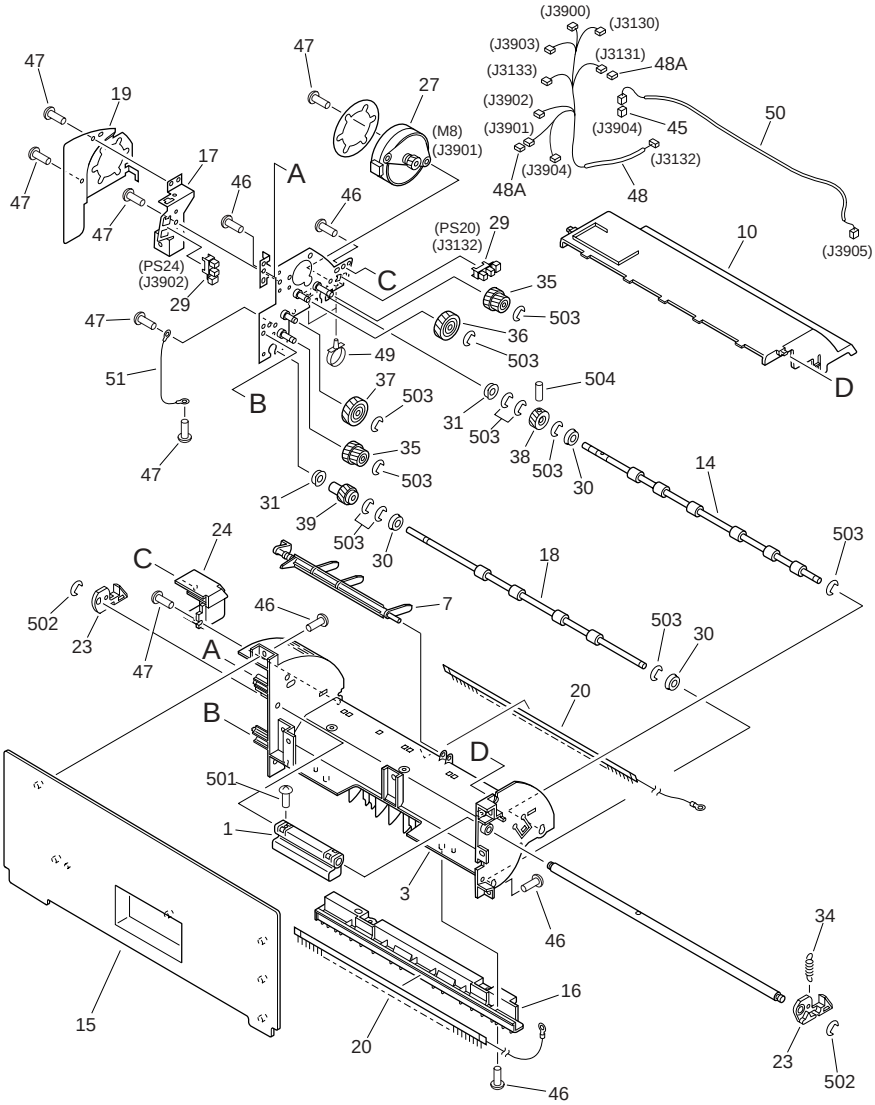

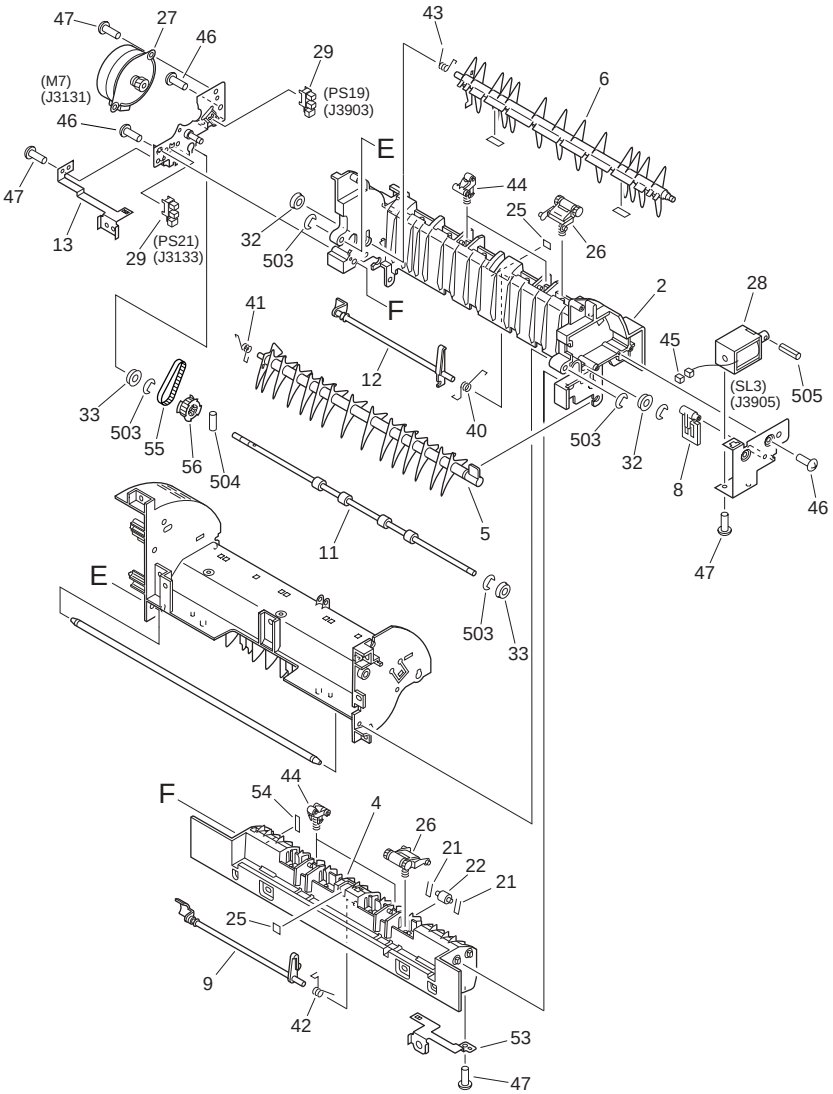

FIGURE & KEY NO.	PARTS NUMBER	RANK	Q'TY	DESCRIPTION	SERIAL NUMBER/ REMARKS	SVC
Fig.Q30	FG6-5693-000		1	DELIVERY ASSEMBLY		
1	FB3-2812-000		1	HANDLE, RIGHT DOOR		

FIGURE & KEY NO.	PARTS NUMBER	RANK	Q'TY	DESCRIPTION	SERIAL NUMBER/ REMARKS	SVC
2	FB5-4861-000		1	FRAME, DELIVERY, FRONT		
3	FB5-4862-000		1	FRAME, DELIVERY, UPPER		
4	FB5-4863-000		1	FRAME, DELIVERY, LOWER		
5	FB5-4866-000		1	DEFLECTOR, LOWER		
6	FB5-4867-000		1	DEFLECTOR, UPPER		
7	FB5-4869-000		1	LEVER, LOAD UP SENSOR		
8	FB5-4872-000		1	LEVER, SL		
9	FB5-4873-000		1	FLAG, DELIVERY SENSOR, 3		
10	FB5-4881-000		1	COVER, DELIVERY, UPPER		
11	FB5-4885-000		1	ROLLER, VERTICAL PATH		
12	FB5-4888-000		1	FLAG, DELIVERY SENSOR, 2		
13	FB5-4891-000		1	GROUNDING PLATE, DELIVERY		
14	FB5-4900-000		1	ROLLER, DELIVERY, 2		
15	FB5-4903-000		1	COVER, DELIVERY		
16	FB5-4904-000		1	RIB, DELIVERY		
17	FB5-4905-000		1	PLATE, OPEN/CLOSE SENSOR		
18	FB5-4906-000		1	ROLLER, DELIVERY, 3		
19	FB5-4907-000		1	COVER, HARNESS		
20	FB5-4908-000		2	ELIMINATOR, STATIC CHARGE		
21	FB5-4910-000		4	SPRING, FEEDING ROLLER		
22	FB5-4920-000		4	ROLLER, FEED		
23	FB5-5141-000		2	HOOK, HANDLE		
24	FB5-5142-000		1	COVER, PI		
25	FB5-5150-000		3	RUBBER, NOISE PREVENTION		
26	FF6-0132-000		10	HOLDER, ROLLER		
27	FH6-1850-000		2	MOTOR, STEPPING	M7,8 J3131,3901	
28	FH6-5019-000		1	SOLENOID, DC24V	SL3 J3905	
29	FK2-0149-000		4	PHOTO-INTERRUPTER	PS19-21,24J3903,3132,3133,3902	
30	FS1-1202-000		2	BUSHING		
31	FS1-1508-000		2	BUSHING		
32	FS5-1377-000		2	BUSHING		

FIGURE & KEY NO.	PARTS NUMBER	RANK	Q'TY	DESCRIPTION	SERIAL NUMBER/ REMARKS	SVC
33	FS5-1943-000		4	BUSHING		
34	FS6-2337-000		1	SPRING, TENSION		
35	FS7-0732-000		2	GEAR, 17T/27T		
36	FS7-0733-000		1	GEAR, 30T		
37	FS7-0734-000		1	GEAR, 30T		
38	FS7-0744-000		1	GEAR, 16T		
39	FS7-0748-000		1	GEAR, 16T		
40	FS7-2391-000		1	SPRING, TORSION		
41	FS7-2392-000		1	SPRING, TORSION		
42	FS7-2393-000		1	SPRING, TORSION		
43	FS7-2397-000		1	SPRING, TORSION		
44	RF5-1448-000		4	HOLDER, ROLLER, 2		
45	VS1-7177-002		2	CONNECTOR, SNAP TIGHT	J3904,3905	
46	XA9-0606-000		16	SCREW, M4X10		
47	XA9-1116-030		13	SCREW,M3X5		
48	FG3-1878-000		1	CABLE, DELIVERY	J3130-3133,3900-3904	
48A	VS1-7177-004		2	CONNECTOR, SNAP TIGHT	J3131,3901	
49	WT2-5565-000		2	CLAMP, CABLE		
50	FG3-1879-000		1	CABLE, SOLENOID RELAY	J3904,3905	
51	FG3-1880-000		1	CABLE, DELIVERY GROUNDING		
53	FB5-9574-000		1	PLATE, GROUNDING		
54	FB5-9808-000		1	RUBBER, NOISE PREVENTION		
55	XF2-1106-240		1	BELT, TIMING		
56	FS5-3835-000		1	PULLEY, 30T		
501	XB1-2400-809		1	SCREW,MACH.,TRUSS HEAD,M4X8		
502	XD2-1100-322		2	RING,E		
503	XD2-1100-502		12	RING,E		
504	XD3-2200-122		2	PIN,DOWEL		
505	XD3-1300-102		1	PIN,SPRING		
	4F1-0859-000		1	ELIMINATOR, STATIC CHARGE		
	FB3-3777-000		2	SHAFT DELIVERY ROLLER		
	FB6-2734-000		1	SPRING,LEAF		

FIGURE & KEY NO.	PARTS NUMBER	RANK	Q'TY	DESCRIPTION	SERIAL NUMBER/ REMARKS	SVC
	FC2-8575-000		1	SPRING, PLATE		
	FC2-8577-000		1	LIB, MOVING		
	FE9-0158-000		1	PLATE, GROUNDING	CANON, EK, PS(STS-A1), OLIV.	
	FA6-0768-020		1	SHEET, STOP	Canon DK SS-E1/E2/F1, ST-D1,AS	
	FG5-5946-340		1	FEEDER, ASSEMBLY	Canon EK(STS-F1) Agfa(STS-F1)	
	XB1-2400-409		1			
	XB4-7400-606		1			
	FB3-7204-000		2	ROLLER, DELIVERY		

FIGURE QB1
LIST OF CONNECTORS

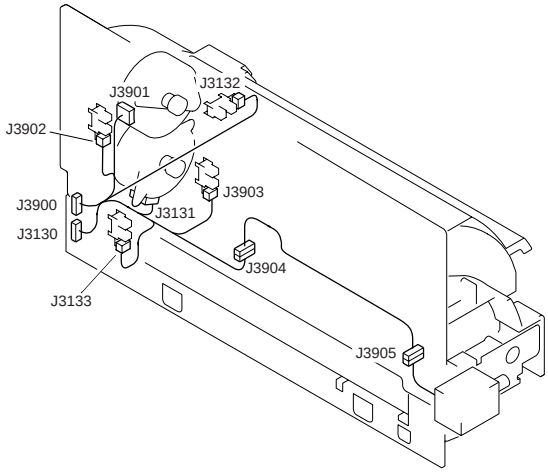

FIGURE & KEY NO.	PARTS NUMBER	RANK	Q'TY	DESCRIPTION	SERIAL NUMBER/ REMARKS	SVC
Fig.QB1	NPN		RF	LIST OF CONNECTORS		
J3130	SYS			COPIER		
J3130	VS1-6321-012		1	CONNECTOR, 12P, MALE		
J3131	NPN			DELIVERY INLET MOTOR	M7	
J3131	VS1-6321-004		1	CONNECTOR, 4P, FEMALE		
J3131	VS1-7177-004		1	CONNECTOR, SNAP TIGHT		
J3132	NPN			DELIVERY FULL SENSOR	PS20	
J3132	VS1-6321-003		1	CONNECTOR, 3P, FEMALE		
J3133	NPN			DELIVERY SENSOR 3	PS21	
J3133	VS1-6321-003		1	CONNECTOR, 3P, FEMALE		
J3900	SYS			COPIER		
J3900	VS1-6321-013		1	CONNECTOR, 13P, FEMALE		
J3901	NPN			DELIVERY OUTLET MOTOR	M8	
J3901	VS1-6321-004		1	CONNECTOR, 4P, FEMALE		
J3901	VS1-7177-004		1	CONNECTOR, SNAP TIGHT		
J3902	NPN			DELIVERY OPEN/CLOSE SENSOR	PS24	
J3902	VS1-6321-003		1	CONNECTOR, 3P, FEMALE		
J3903	NPN			DELIVERY SENSOR 2	PS19	
J3903	VS1-6321-003		1	CONNECTOR, 3P, FEMALE		

FIGURE & KEY NO.	PARTS NUMBER	RANK	Q'TY	DESCRIPTION	SERIAL NUMBER/ REMARKS	SVC
J3904	VS1-6321-002		2	CONNECTOR, 2P, FEMALE		
J3904	VS1-7177-002		1	CONNECTOR, SNAP TIGHT		
J3905	NPN			DELIVERY SOLENOID	SL3	
J3905	VS1-6321-002		1	CONNECTOR, 2P, FEMALE		
J3905	VS1-7177-002		1	CONNECTOR, SNAP TIGHT		

FIGURE QB2
LIST OF ELECTRIC PARTS

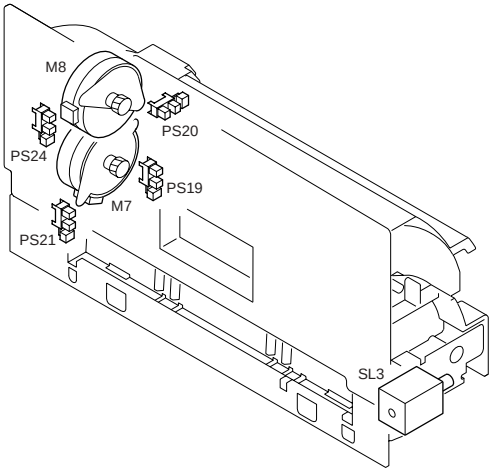

FIGURE & KEY NO.	PARTS NUMBER	RANK	Q'TY	DESCRIPTION	SERIAL NUMBER/ REMARKS	SVC
Fig.QB2	NPN		RF	LIST OF ELECTRIC PARTS		
M7	FH6-1850-000		1	MOTOR, STEPPING		
M8	FH6-1850-000		1	MOTOR, STEPPING		
PS19	FK2-0149-000		1	PHOTO-INTERRUPTER		
PS20	FK2-0149-000		1	PHOTO-INTERRUPTER		
PS21	FK2-0149-000		1	PHOTO-INTERRUPTER		
PS24	FK2-0149-000		1	PHOTO-INTERRUPTER		
SL3	FH6-5019-000		1	SOLENOID, DC24V		

Envelope Feeder Attachment-B1(Parts Catalog)

Envelope Feeder Attachment-B1

120/220/240V	**F24-3653**	**XDV00001-**
100V	**F25-5411**	**XDU00001-**

Contents

LA ASSEMBLY LOCATION DIAGRAM 7-1
L10 ENVELOPE FEEDER ATTACHMENT..... 7-2

FIGURE LA
ASSEMBLY LOCATION DIAGRAM

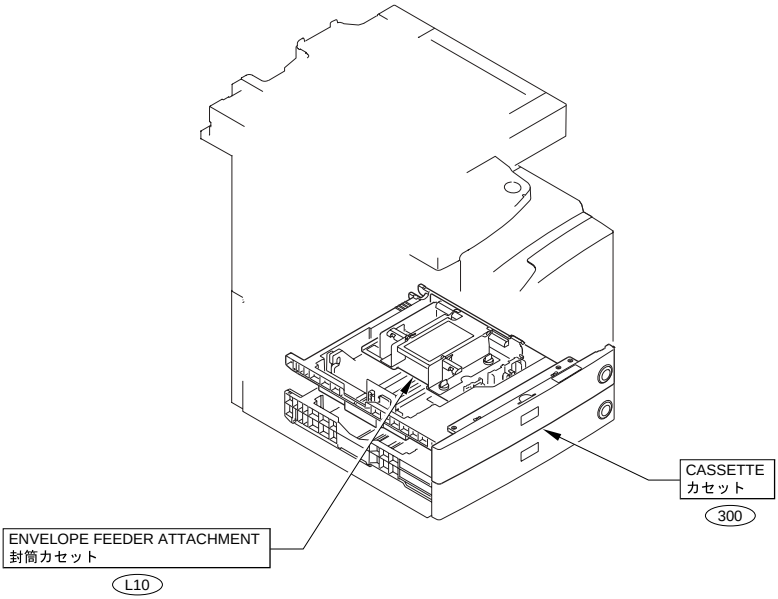

FIGURE L10
ENVELOPE FEEDER ATTACHMENT

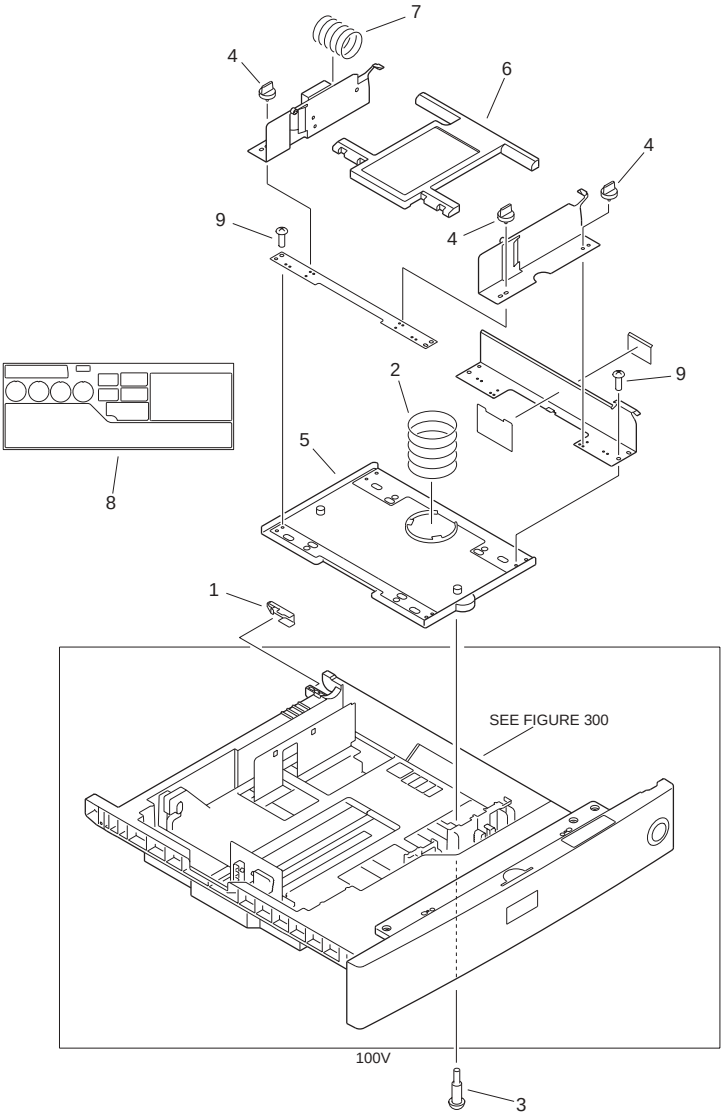

FIGURE & KEY NO.	PARTS NUMBER	RANK	Q'TY	DESCRIPTION	SERIAL NUMBER/ REMARKS	SVC
Fig.L10	NPN		RF	ENVELOPE FEEDER ATTACHMENT		
1	FB3-2911-000		1	HOLDER, LIFTER STOP		

FIGURE & KEY NO.	PARTS NUMBER	RANK	Q'TY	DESCRIPTION	SERIAL NUMBER/ REMARKS	SVC
2	FB3-2916-000		1	SPRING, COMPRESSION		
2	FB3-2903-000		1	SPRING, COMPRESSION, GREEN		
3	FS1-9200-000		2	SCREW, STEPPED, M3		
4	FB3-2908-020		4	SCREW, KNOB		
5	FB3-2912-000		1	BASE PLATE, ENVELOPE FEEDER, 1		
6	FB3-2915-000		1	PLATE, PAPER LIFTING		
7	FB3-2966-000		1	SPRING, COMPRESSION		
8	FB5-9575-000		1	LABEL, ENVELPOE		
9	XA9-0929-000		4	SCREW,TP,M4X7		

Token Ring Network Interface Adapter iN-TR2(Parts Catalog)

Token Ring Network Interface Adapter iN-TR2

F61-8503

Contents

NA ASSEMBLY LOCATION DIAGRAM 8-1
N90 TOKENRING BOARD PCB ASSEMBLY 8-2

FIGURE NA
ASSEMBLY LOCATION DIAGRAM

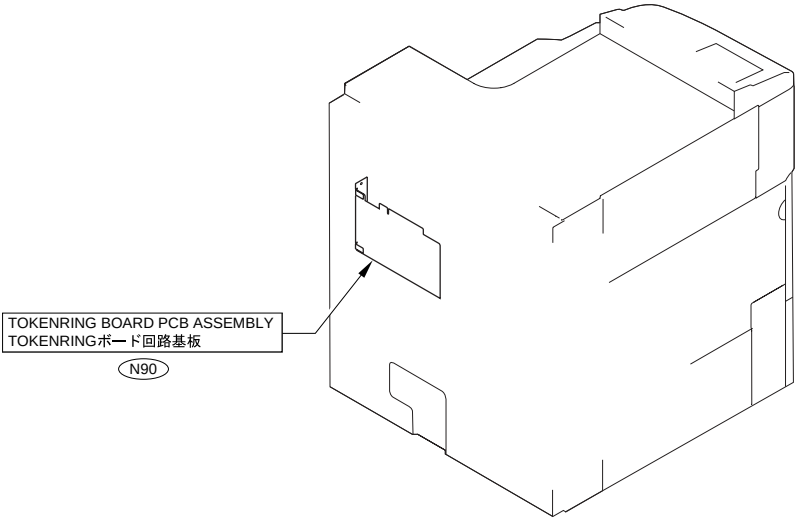

FIGURE N90
TOKENRING BOARD PCB ASSEMBLY

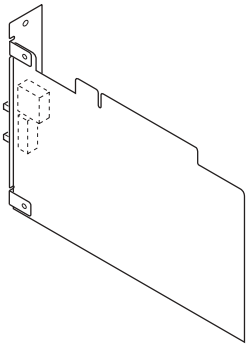

FIGURE & KEY NO.	PARTS NUMBER	RANK	Q'TY	DESCRIPTION	SERIAL NUMBER/ REMARKS	SVC
Fig.N90	FG6-5796-000		1	TOKENRING BOARD PCB ASSEMBLY		
IC6	FF3-4343-000		1	IC, AT93C46-10SC-2.7, EEP-ROM		

Super G3 FAX Board-J1/J2(Parts Catalog)

Super G3 FAX Board-J2

100V	**F61-8917**

Super G3 FAX Board-J1

120V	**F61-8936**
220V	**F61-8941**
240V	**F61-8951**
240V	**F61-8961**
220V	**F61-8971**
220V	**F61-8981**
220V	**F61-8991**

Contents

GA ASSEMBLY LOCATION DIAGRAM 9-1
G90 SUPER G3 FAX KIT 9-2
G91 SPEAKER ASSEMBLY 9-5
GB1 LIST OF CONNECTORS 9-6
GB2 LIST OF ELECTRIC PARTS 9-9

FIGURE GA
ASSEMBLY LOCATION DIAGRAM

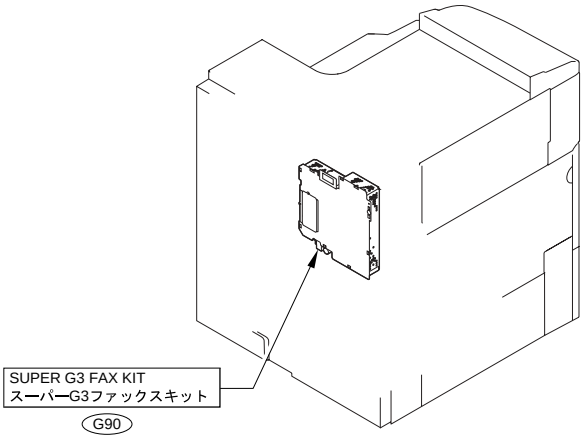

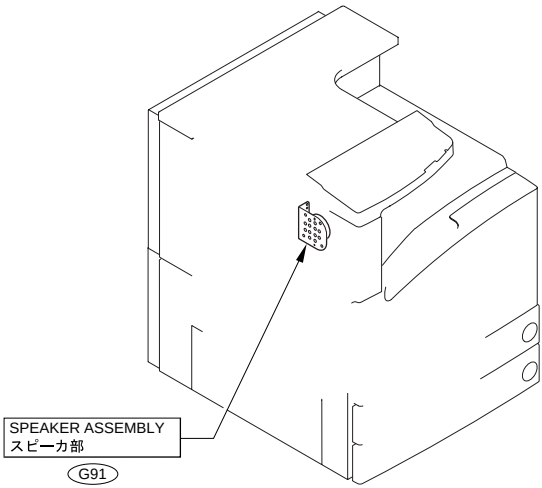

FIGURE G90
SUPER G3 FAX KIT

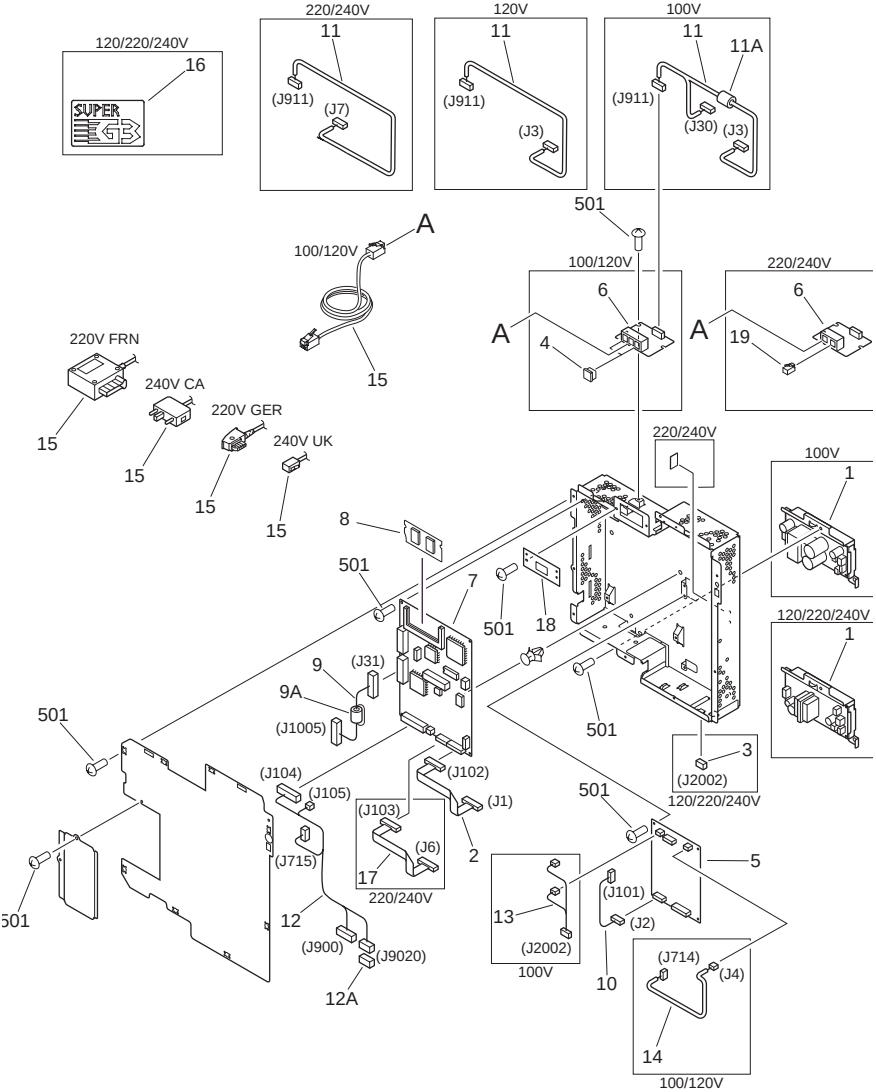

FIGURE & KEY NO.	PARTS NUMBER	RANK	Q'TY	DESCRIPTION	SERIAL NUMBER/ REMARKS	SVC
Fig.G90	NPN		RF	SUPER G3 FAX KIT		
1	FG6-5798-000		1	PSEUDO CI PCB ASSEMBLY	100V	

FIGURE & KEY NO.	PARTS NUMBER	RANK	Q'TY	DESCRIPTION	SERIAL NUMBER/ REMARKS	SVC
1	FG6-5802-000		1	OFF-HOOK DETECT PCB ASSEMBLY	120/220/240V	
2	FH2-6928-000		1	CABLE, FLAT, 1	J1,102	
3	VS4-0002-002		1	CONNECTOR, 2P, FEMALE	120/220/240V J2002	
4	WT8-5076-000		2	SPACER, MODULAR	100/120V	
5	FM2-2795-000		1	NCU BOARD ASS'Y	100V	
5	FM2-2796-000		1	NCU PCB ASSEMBLY	120V	
5	FM2-3815-000		1	NCU PCB ASSEMBLY	220V ASIA240V CA	
5	FM2-3816-000		1	NCU PCB ASSEMBLY	220V AMS,GER,FRN240V UK	
6	FG3-1582-000		1	G3 MODULAR PCB ASSEMBLY	100V	
6	FG3-1992-030		1	G3 MODULAR PCB ASSEMBLY	120V	
6	FG9-3920-000		1	G3 MODULAR PCB ASSEMBLY	220V AMS,GER,FRN240V UK	
6	FG9-3921-000		1	G3 MODULAR PCB ASSEMBLY	220V ASIA240V CA	
7	FM2-4560-000		1	G3 FAX CONTROL PCB ASSEMBLY		
8	FG3-2497-310		1	DIMM ASS'Y	100/120V	
8	FG3-2497-310		1	DIMM ASS'Y	220/240V	
8	FG3-2707-000		1	DIMM ASS'Y	220/240V	
9	FG3-1983-000		1	CABLE, FAX CONTROLLER	J31,1005	
9A	WE8-5800-000		1	CORE, FERRITE		
10	FG3-1984-000		1	CABLE, G3 ANALOG, 1	J2,J101	
11	FG3-1985-000		1	CABLE, G3 MODULAR	100V J3,30,911	
11	FG3-1991-000		1	CABLE, G3 MODULAR	120V J3,911	
11	FG3-2658-000		1	CABLE, G3 MODULAR	220/240V J7,911	
11A	WE8-5780-000		1	CORE,FERRITE	100V	
12	FG3-1986-000		1	CABLE, FAX POWER SUPPLY	J104,105,715J900,9020	
12A	VS1-7177-002		1	CONNECTOR, SNAP TIGHT	J9020	
13	FG3-1988-000		1	CABLE, GROUNDING	100V J2002	
14	FG3-1989-000		1	CABLE, G3 HV	100/120V J4,714	
15	HH2-1914-000		1	MODULAR CABLE	240V UK	
15	HH2-2074-000		1	MODULAR CABLE	220V GER	
15	HH2-2478-000		1	MODULAR CORD	240V CA	
15	HH2-2830-000		1	CORD, MODULAR	100/120V	

FIGURE & KEY NO.	PARTS NUMBER	RANK	Q'TY	DESCRIPTION	SERIAL NUMBER/ REMARKS	SVC
15	HK1-0547-000		1	CORD, MODULAR	220V FRN	
16	FB4-6724-000		1	LABEL, G3	220/240V	
16	FB4-6728-000		1	LABEL, 'SUPER G3'	120V	
17	FH2-6962-000		1	CABLE, FLAT, 2	220/240V J6,103	
18	FB5-5120-000		1	PLATE, BLANKING, G3	100V	
18	FB6-2875-000		1	COVER, MODULAR	120/220/240V	
19	WS1-5370-000		1	SPACER, MODULAR	220/240V	
501	XB6-7300-607		21	SCREW,TP,M3X6		

FIGURE G91
SPEAKER ASSEMBLY

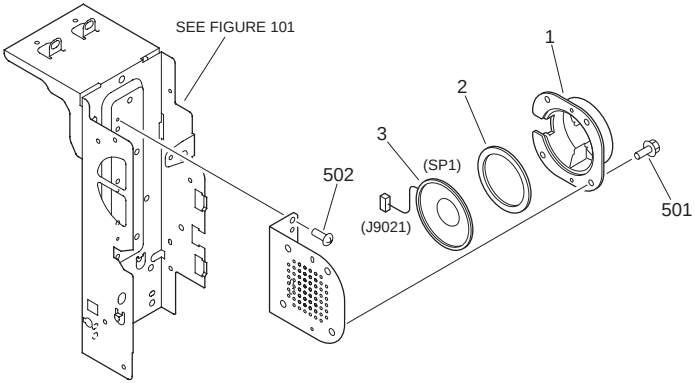

NOTE : This assembly does not include the part shown with key No. 502.

注：このユニットにKey No. 502の部品は含まれません。

FIGURE & KEY NO.	PARTS NUMBER	RANK	Q'TY	DESCRIPTION	SERIAL NUMBER/ REMARKS	SVC
Fig.G91	FG6-5799-000		1	SPEAKER ASSEMBLY		
1	FB5-5126-000		1	HOLDER, SPEAKER		
2	FC6-5059-000		1	DAMPER, RUBBER		
3	FK2-0428-000		1	SPEAKER	SP1 J9021	
501	XB3-6400-800		4	SCREW,RS,M4X8		
502	XB6-7300-607		2	SCREW,TP,M3X6	SEE NOTE	

FIGURE GB1
LIST OF CONNECTORS

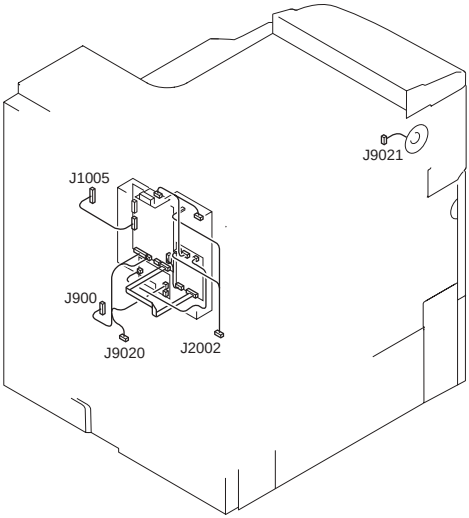

FIGURE & KEY NO.	PARTS NUMBER	RANK	Q'TY	DESCRIPTION	SERIAL NUMBER/ REMARKS	SVC
Fig.GB1	NPN		RF	LIST OF CONNECTORS		
J1	PCB			NCU BOARD 1		
J1	FH2-6928-000		1	CABLE, FLAT, 1		
J2	PCB			NCU BOARD 1		
J2	VS1-5452-006		1	CONNECTOR, 6P, FEMALE		
J3	PCB			NCU BOARD 1	100/120V	
J3	VS3-5080-007		1	CONNECTOR, 7P, FEMALE	100V	
J3	VS3-5080-005		1	CONNECTOR, 5P, FEMALE	120V	
J3	WT1-5155-000		4	TERMINAL	100V	
J3	WT1-5155-000		2	TERMINAL	120V	
J4	PCB			NCU BOARD 1	100/120V	
J4	VS3-5080-002		1	CONNECTOR, 2P, MALE	100/120V	
J4	WT1-5155-000		2	TERMINAL	100/120V	
J6	PCB			NCU BOARD 1	220/240V	
J6	FH2-6962-000		1	CABLE, FLAT, 2	220/240V	
J7	PCB			NCU BOARD 1	220/240V	
J7	VS3-0143-006		1	CONNECTOR, 6P, FEMALE	220/240V	
J7	WS3-5251-000		6	SOCKET CONTACT	220/240V	

FIGURE & KEY NO.	PARTS NUMBER	RANK	Q'TY	DESCRIPTION	SERIAL NUMBER/ REMARKS	SVC
J30	PCB			NCU BOARD 2	ACCESSORY	
J30	VS3-5080-007		1	CONNECTOR, 7P, FEMALE	100V	
J30	WT1-5155-000		2	TERMINAL	100V	
J31	PCB			G3 FAX BOARD		
J31	VT2-5161-040		1	HOLDER, CONNECTOR, 40P		
J31	VS1-6313-020		1	CONNECTOR, 20P, FEMALE		
J31	VS1-6314-020		1	CONNECTOR, 20P, FEMALE		
J101	PCB			G3 FAX BOARD		
J101	VS1-5452-006		1	CONNECTOR, 6P, FEMALE		
J102	PCB			G3 FAX BOARD		
J102	FH2-6928-000		1	CABLE, FLAT, 1		
J103	PCB			G3 FAX BOARD	220/240V	
J103	FH2-6962-000		1	CABLE, FLAT, 2	220/240V	
J104	PCB			G3 FAX BOARD		
J104	VS1-6302-014		1	CONNECTOR, 14P, MALE		
J104	WS3-5569-000		12	PIN, CONTACT		
J105	PCB			G3 FAX BOARD		
J105	VS3-0143-002		1	CONNECTOR, 2P, FEMALE		
J105	WS3-5251-000		2	SOCKET CONTACT		
J106	PCB			G3 FAX BOARD		
J106	PCB			MULTIPORT MODEM	ACCESSORY	
J712	SYS			COPIER		
J712	PCB			PSEUDO CI	100V	
J712	PCB			OFF-HOOK DETECT	120/220/240V	
J713	SYS			COPIER		
J713	PCB			PSEUDO CI	100V	
J713	PCB			OFF-HOOK DETECT	120/220/240V	
J714	PCB			PSEUDO CI	100V	
J714	PCB			OFF-HOOK DETECT	120V	
J714	VS3-5083-003		1	CONNECTOR, 3P, FEMALE	100/120V	
J714	WS3-5160-000		2	SOCKET CONTACT, 18-24AWG	100/120V	
J715	PCB			PSEUDO CI	100V	

FIGURE & KEY NO.	PARTS NUMBER	RANK	Q'TY	DESCRIPTION	SERIAL NUMBER/ REMARKS	SVC
J715	PCB			OFF-HOOK DETECT	120/220/240V	
J715	VS1-6302-002		1	CONNECTOR, 2P, MALE		
J715	WS3-5569-000		2	PIN, CONTACT		
J900	SYS			COPIER		
J900	VS1-6702-010		1	CONNECTOR, 10P, FEMALE		
J900	WS3-5720-000		10	SOCKET CONTACT, 22-28AWG		
J911	PCB			G3 MODULAR BOARD		
J911	VS3-5080-007		1	CONNECTOR, 7P, FEMALE	100/120V	
J911	VS3-0143-011		1	CONNECTOR, 11P, FEMALE	220/240V	
J911	WT1-5155-000		6	TERMINAL	100V	
J911	WT1-5155-000		2	TERMINAL	120V	
J911	WS3-5251-000		11	SOCKET CONTACT	220/240V	
J1005	SYS			COPIER		
J1005	VT2-5161-040		1	HOLDER, CONNECTOR, 40P		
J1005	VS1-6313-020		1	CONNECTOR, 20P, FEMALE		
J1005	VS1-6314-020		1	CONNECTOR, 20P, FEMALE		
J2002	SYS			COPIER		
J2002	VS4-0002-002		1	CONNECTOR, 2P, FEMALE		
J2002	WS4-0217-000		2	SOCKET CONTACT, 22-18AWG		
J9020	SYS			COPIER		
J9020	VS1-7178-002		1	CONNECTOR, 2P, FEMALE		
J9020	VS1-7177-002		1	CONNECTOR, SNAP TIGHT		
J9021	SYS			COPIER		
J9021	NPN			SPEAKER	SP1	

FIGURE GB2
LIST OF ELECTRIC PARTS

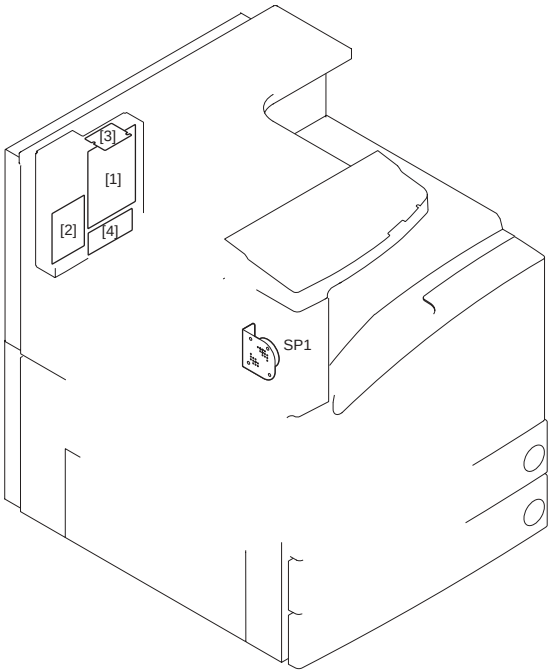

FIGURE & KEY NO.	PARTS NUMBER	RANK	Q'TY	DESCRIPTION	SERIAL NUMBER/ REMARKS	SVC
Fig.GB2	NPN		RF	LIST OF ELECTRIC PARTS		
1	FM2-4560-000		1	G3 FAX CONTROL PCB ASSEMBLY		
2	FM2-2795-000		1	NCU BOARD ASS'Y	100V	
2	FM2-2796-000		1	NCU PCB ASSEMBLY	120V	
2	FM2-3816-000		1	NCU PCB ASSEMBLY	220V AMS,GER,FRN240V UK	
2	FM2-3815-000		1	NCU PCB ASSEMBLY	220V ASIA240V CA	
3	FG3-1582-000		1	G3 MODULAR PCB ASSEMBLY	100V	
3	FG3-1992-030		1	G3 MODULAR PCB ASSEMBLY	120V	
3	FG9-3920-000		1	G3 MODULAR PCB ASSEMBLY	220V AMS,GER,FRN240V UK	
3	FG9-3921-000		1	G3 MODULAR PCB ASSEMBLY	220V ASIA240V CA	
4	FG6-5798-000		1	PSEUDO CI PCB ASSEMBLY	100V	
4	FG6-5802-000		1	OFF-HOOK DETECT PCB ASSEMBLY	120/220/240V	
SP1	FK2-0428-000		1	SPEAKER		

CONTROL FONT ROM CFR-M1(Parts Catalog)

CONTROL FONT ROM CFR-M1

F61-8504

Contents

EA ASSEMBLY LOCATION DIAGRAM 10-1
E90 CONTROL FONT ROM 10-2

FIGURE EA
ASSEMBLY LOCATION DIAGRAM

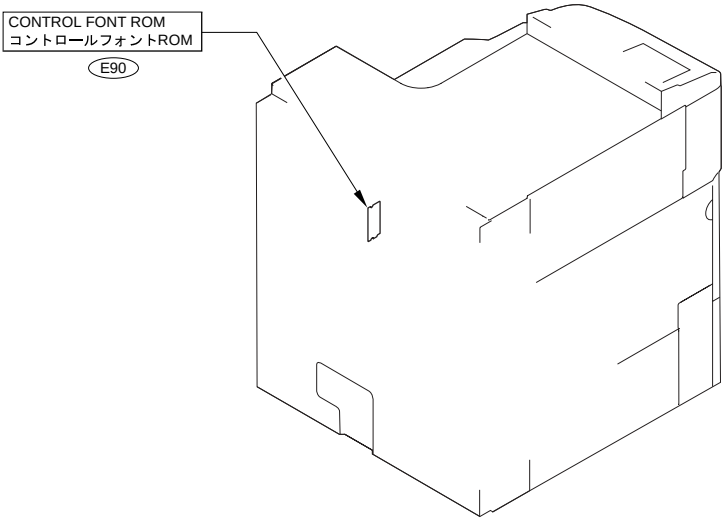

FIGURE E90
CONTROL FONT ROM

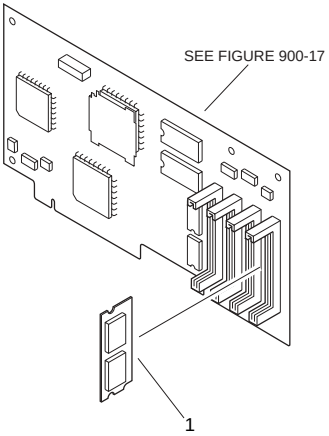

FIGURE & KEY NO.	PARTS NUMBER	RANK	Q'TY	DESCRIPTION	SERIAL NUMBER/ REMARKS	SVC
Fig.E90	NPN		RF	CONTROL FONT ROM		
1	FG3-1934-020		1	DIMM ASS'Y		

Prepared by

OIP HFE Promotion Center

CANON INC.

Canon